MODULE lv (with 4 clips)

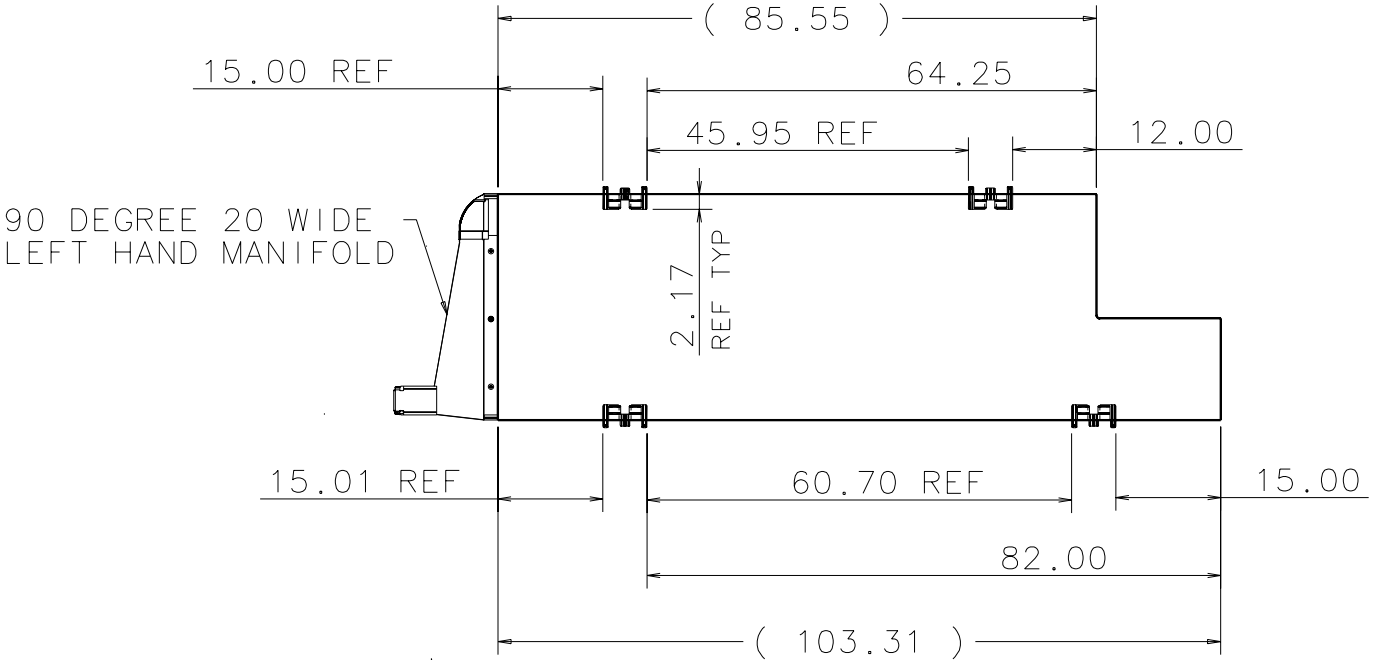

Plotted by edchi on 20-Sep-01 . File: partial_lv1.pff