MODULE Jv (with 2 clips)

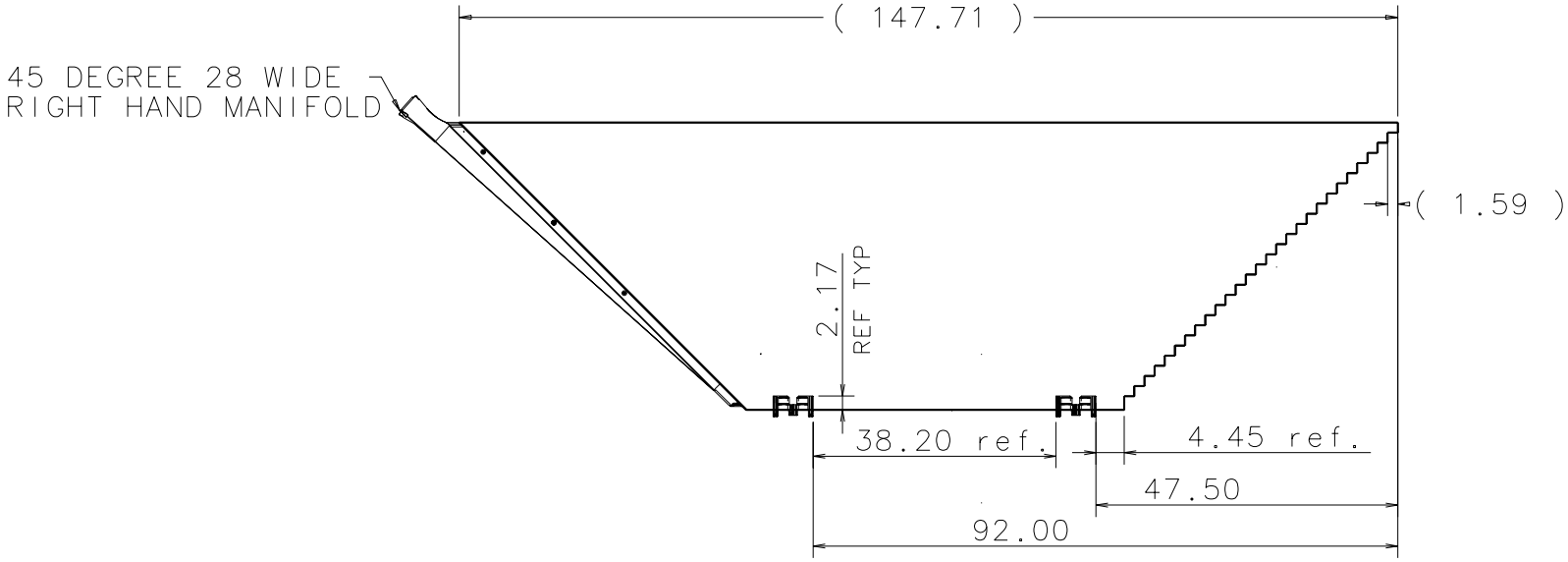

Plotted by edchi on 20-Sep-01 , File: fullyplane_Jv1.pff