MODULE Ju (with 2 clips)

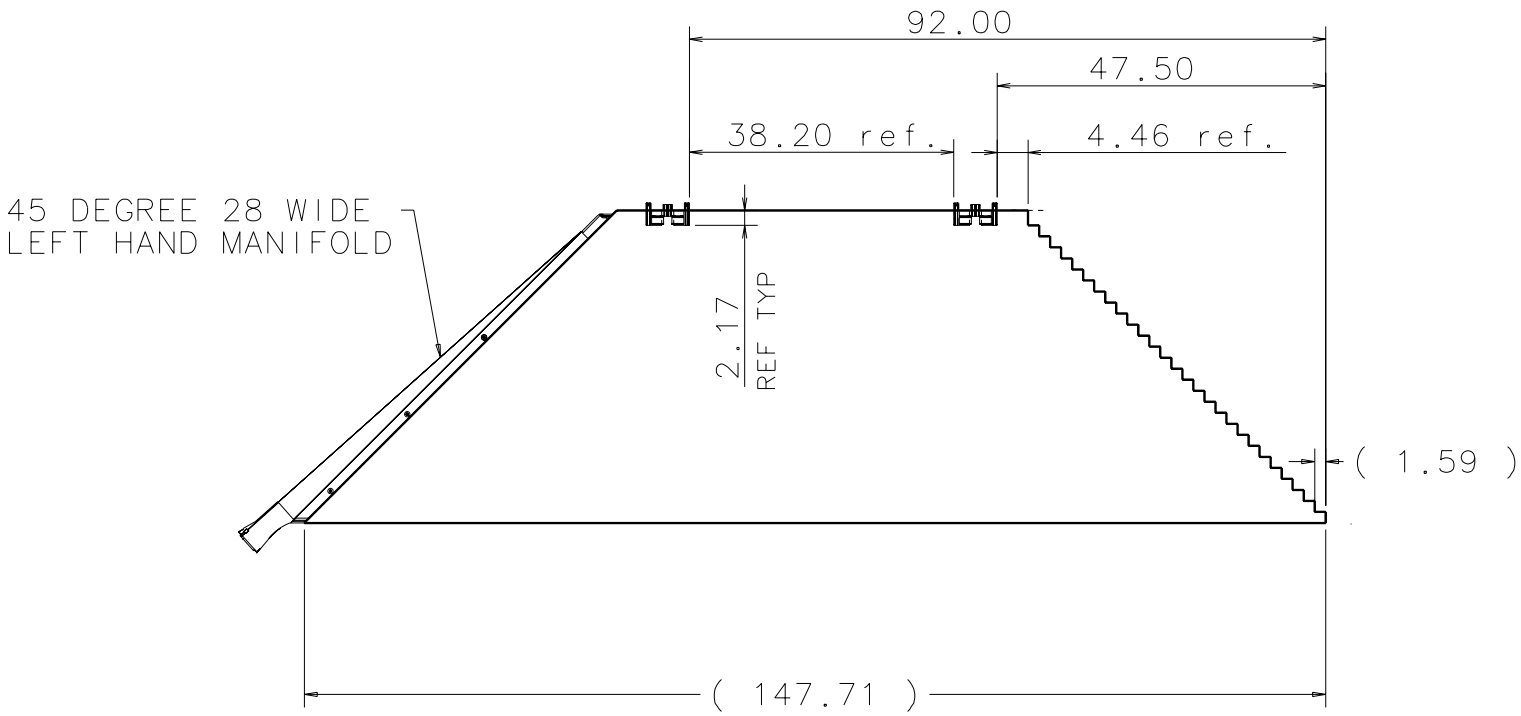

Plotted by edchi on 20-Sep-01 . File: fullyplane_Ju1.pff