MINOS Far Detector Electronics
Printed Circuit Boards
17 July 2000

VFB, VARC, VMM

MINOS FAR FRONT END BOARD DESCRIPTION

Introduction

The MINOS Far Detector Front End Board (VFB) is a six layer FR4 PCB.
It has connectors along the two shortest sides and on the underside for connection to the VARC and Mux Box respectively. It is attached to the mux box by six studs, which locate in six corresponding holes in the VFB. For information on the Mux Box and VARC, consult the associated documentation for these MINOS far detector components. For detailed mechanical information on the VFB, consult the dimensional drawing for the VFB included in this pack.

Materials and construction

Board Type – 6 layer multilayer FR4 printed circuit board
Circuit dimensions – 3 * 8 inches
Board Thickness – 0.063 inch (1.6mm)
Track Material and Thickness – Copper 1oz
Finish – Hot air solder levelled
Colour - Green
Number and Colour of Legends – 2 white

Layer Assignments

Layers are assigned ascending numbers from 1 to 6. Layer 1 is the top of the board.

Layer 1 Functions
Component footprints on topside of board and track to via holes to access inner layers. Also some connections between adjacent component pads. Ground plane to cover unused area.

Layer 2 Functions
Tracking layer.

Layer 3 Functions
Power planes for positive rails, i.e.
+5V
+3.3V
+2V0
+2V1

Layer 4 Functions
Power planes for negative rails, i.e.
-5V
-2V0
-2V1
-2V2
-2V3

Layer 5 Functions
Tracking Layer

Layer 6 Functions
Component footprints for underside of board and track to via holes to access inner layers. Ground plane to cover unused area.

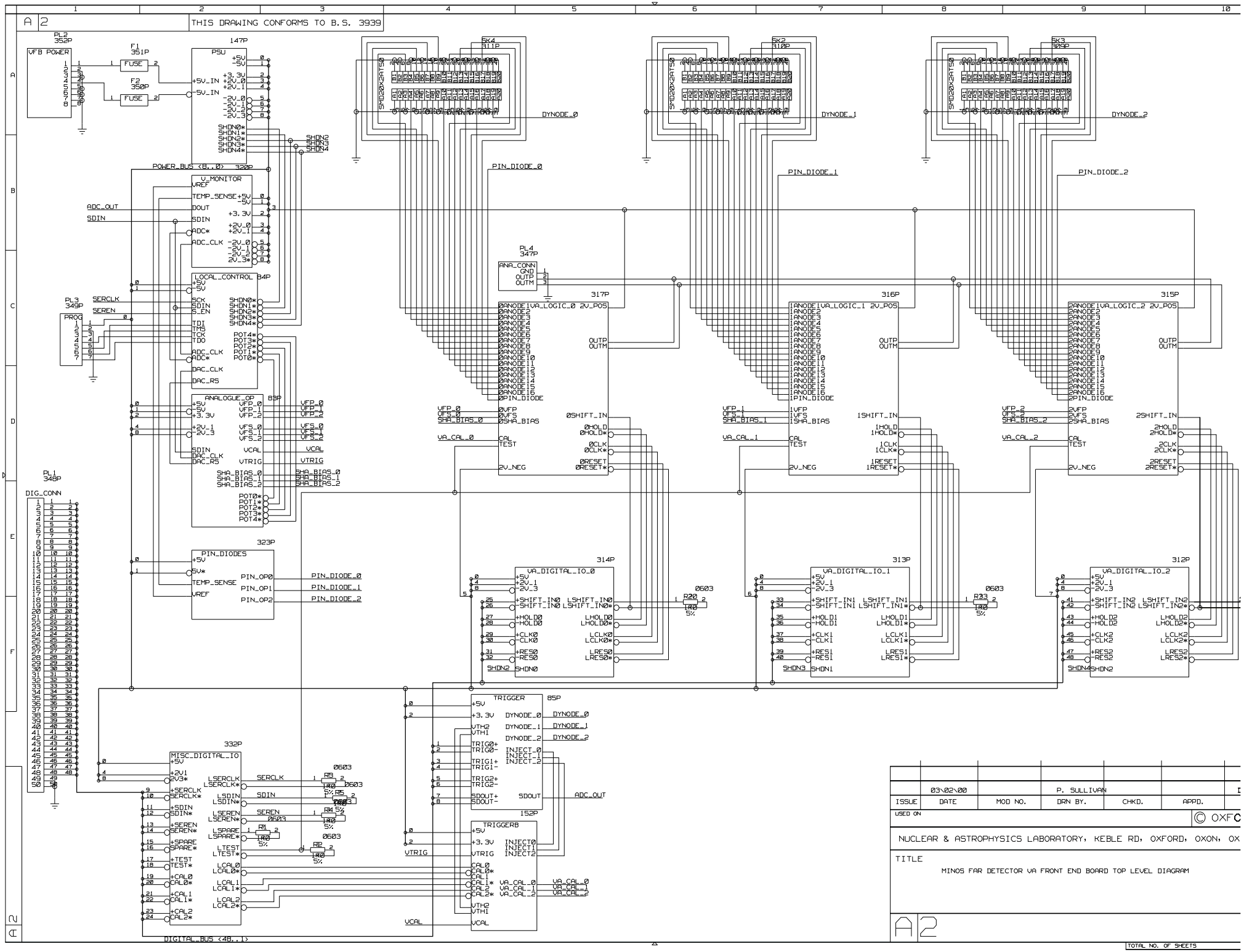
THIS DRAWING CONFORMS TO B.S. 3939
PL2 352P
VFB POWER
F1 351P
FUSE
F2 350P
FUSE
147P
PSU
+5V_IN
-5V_IN
POWER_BUS <8..0> 320P
V_MONITOR
ADC_OUT
SDIN
LOCAL_CONTROL 84P
SERCLK
SEREN
PL3 349P
PROG
ANALOGUE_OP 83P
PL1 348P
DIG_CONN
PIN_DIODES 323P
PIN_DIODE_0
PIN_DIODE_1
PIN_DIODE_2
MISC_DIGITAL_IO 332P
DIGITAL_BUS <48..1>
SK4 311P
SK2 312P
SK3 303P
DYNODE_0
DYNODE_1
DYNODE_2
PL4 347P
ANA_CONN
317P
316P
315P
VA_LOGIC_0 2V_POS
VA_LOGIC_1 2V_POS
VA_LOGIC_2 2V_POS
VA_CAL_0
VA_CAL_1
VA_CAL_2
314P
313P
312P
VA_DIGITAL_IO_0
VA_DIGITAL_IO_1
VA_DIGITAL_IO_2
R20 0603 1K0 5%
R33 0603 1K0 5%
TRIGGER 85P
TRIGGERB 152P
ADC_OUT
VTRIG
VCAL
ISSUE
DATE
MOD NO.
DRN BY.
CHKD.
APPD.
USED ON
03\02\00
P. SULLIVAN
© OXFO
NUCLEAR & ASTROPHYSICS LABORATORY, KEBLE RD, OXFORD, OXON, OX
TITLE
MINOS FAR DETECTOR VA FRONT END BOARD TOP LEVEL DIAGRAM
A2
TOTAL NO. OF SHEETS

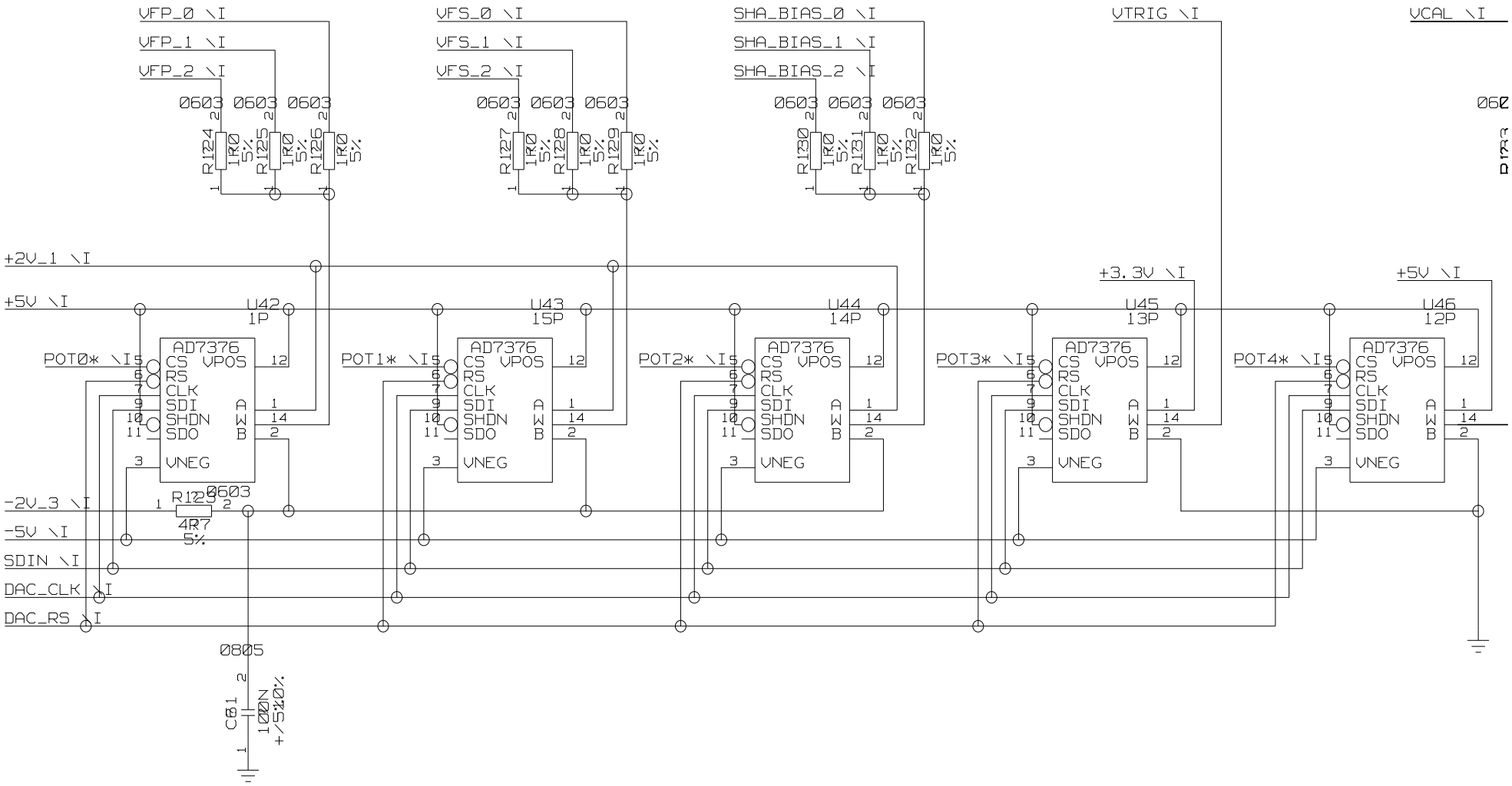

OXFORD UNIVERSITY
DEPT OF NUCLEAR AND ASTROPHYSIC

PROJECT: MINOS FAR DETECTOR	
TITLE: VFB ANALOGUE OUTPUTS	
DOCUMENT NUMBER:	
ENG: P. SULLIVAN	DATE: 03\02\0
DWN: P. SULLIVAN	SHEET OF

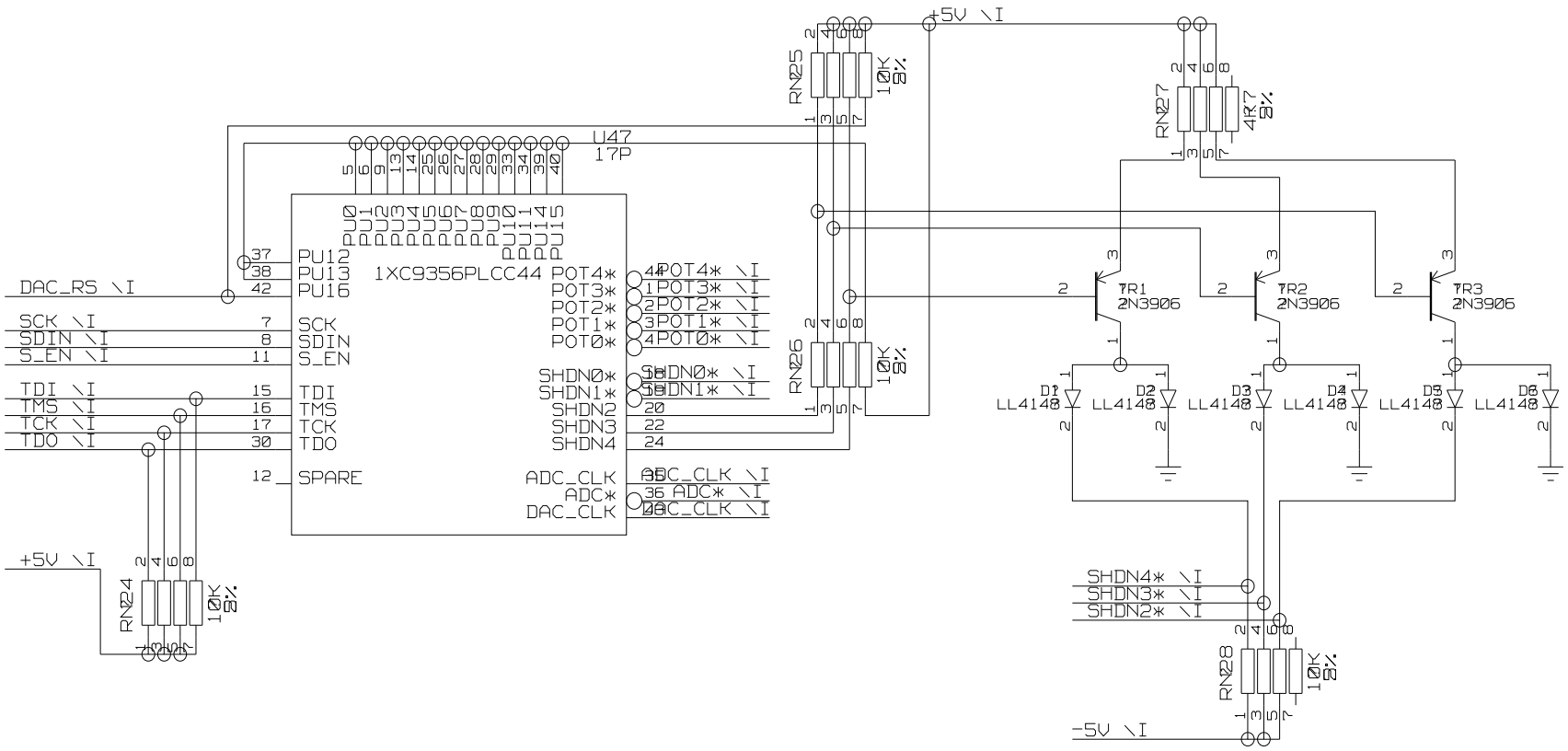

OXFORD UNIVERSITY DEPT OF NUCLEAR AND ASTROPHYSIC	
PROJECT: MINOS FAR DETECTOR	
TITLE: VFB LOCAL CONTROLLER	
DOCUMENT NUMBER:	
ENG: P. SULLIVAN	DATE: 03\02\00
DWN: P. SULLIVAN	SHEET OF

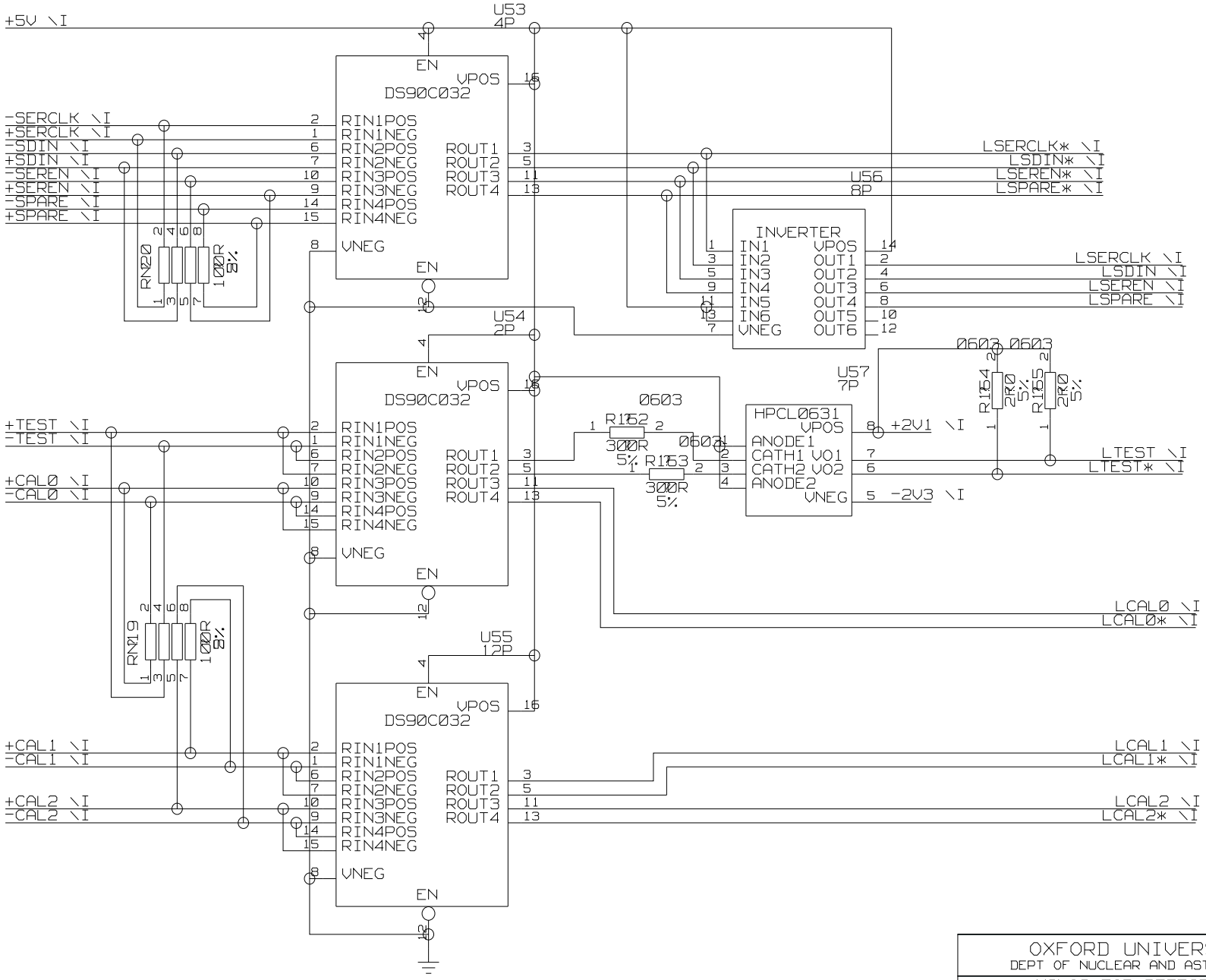

OXFORD UNIVERSITY
DEPT OF NUCLEAR AND ASTROPHYSIC

PROJECT: MINOS FAR DETECTOR	
TITLE: VFB MISC DIGITAL IO	
DOCUMENT NUMBER:	
ENG: P. SULLIVAN	DATE 03\02\00
DWN: P. SULLIVAN	SHEET OF

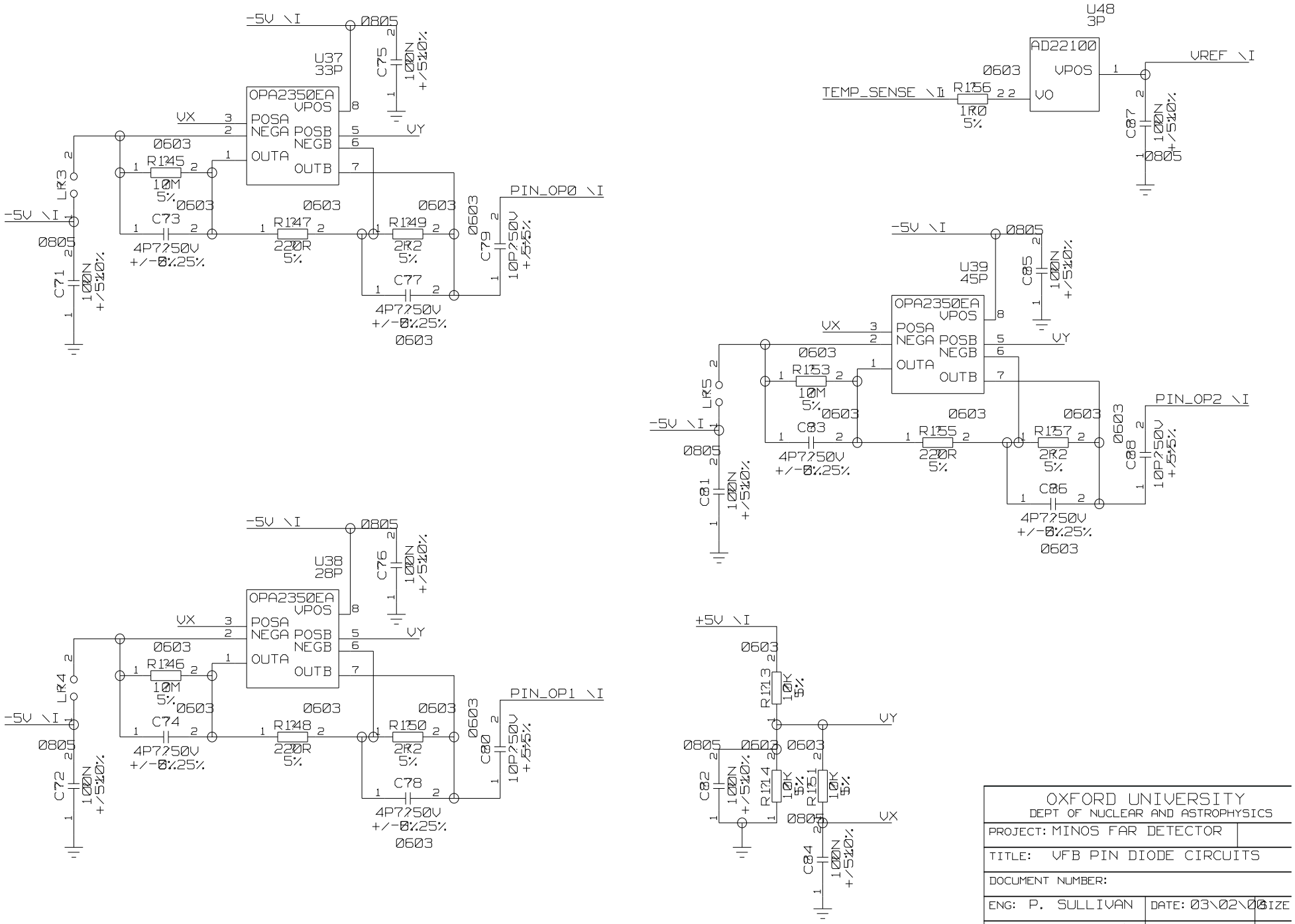

OXFORD UNIVERSITY
DEPT OF NUCLEAR AND ASTROPHYSICS

PROJECT: MINOS FAR DETECTOR		
TITLE: VFB PIN DIODE CIRCUITS		
DOCUMENT NUMBER:		
ENG: P. SULLIVAN	DATE: 03\02\00	SIZE
DWN: P. SULLIVAN	SHEET OF	REV:

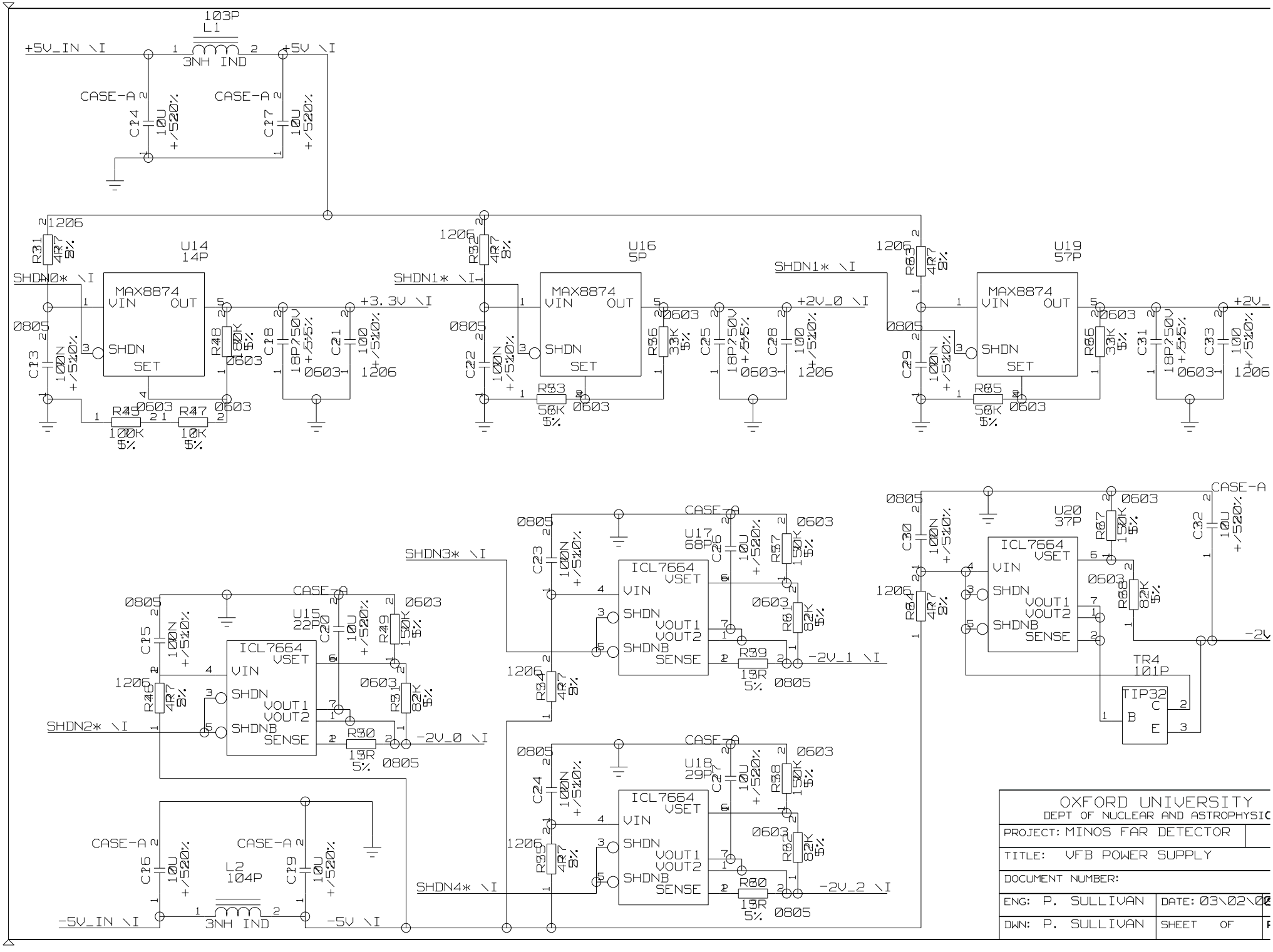

OXFORD UNIVERSITY
DEPT OF NUCLEAR AND ASTROPHYSIC

PROJECT: MINOS FAR DETECTOR	
TITLE: VFB POWER SUPPLY	
DOCUMENT NUMBER:	
ENG: P. SULLIVAN	DATE: 03\02\0
DWN: P. SULLIVAN	SHEET OF

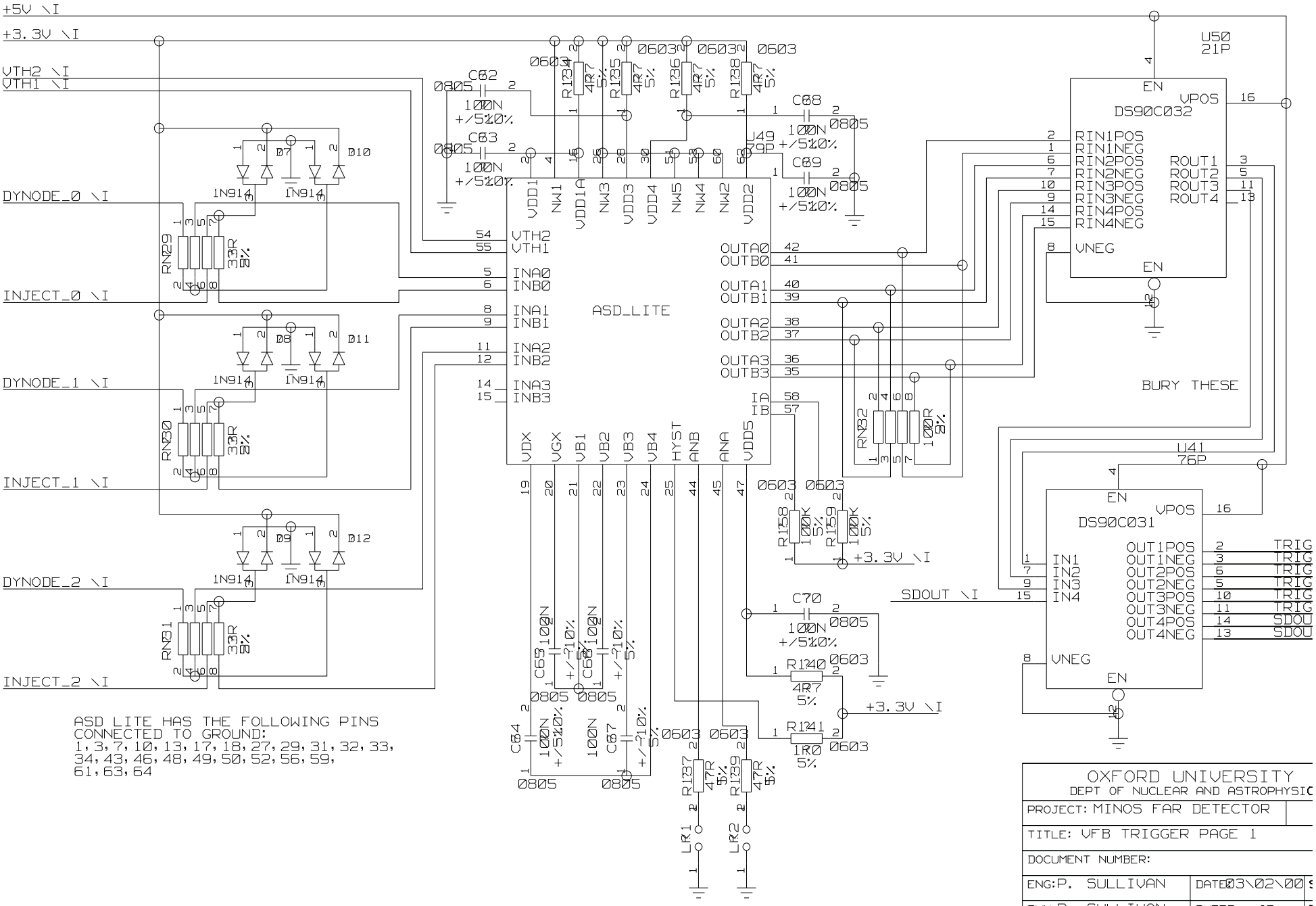

OXFORD UNIVERSITY
DEPT OF NUCLEAR AND ASTROPHYSIC

PROJECT: MINOS FAR DETECTOR	
TITLE: VFB TRIGGER PAGE 1	
DOCUMENT NUMBER:	
ENG: P. SULLIVAN	DATE 03\02\00
DWN: P. SULLIVAN	SHEET OF

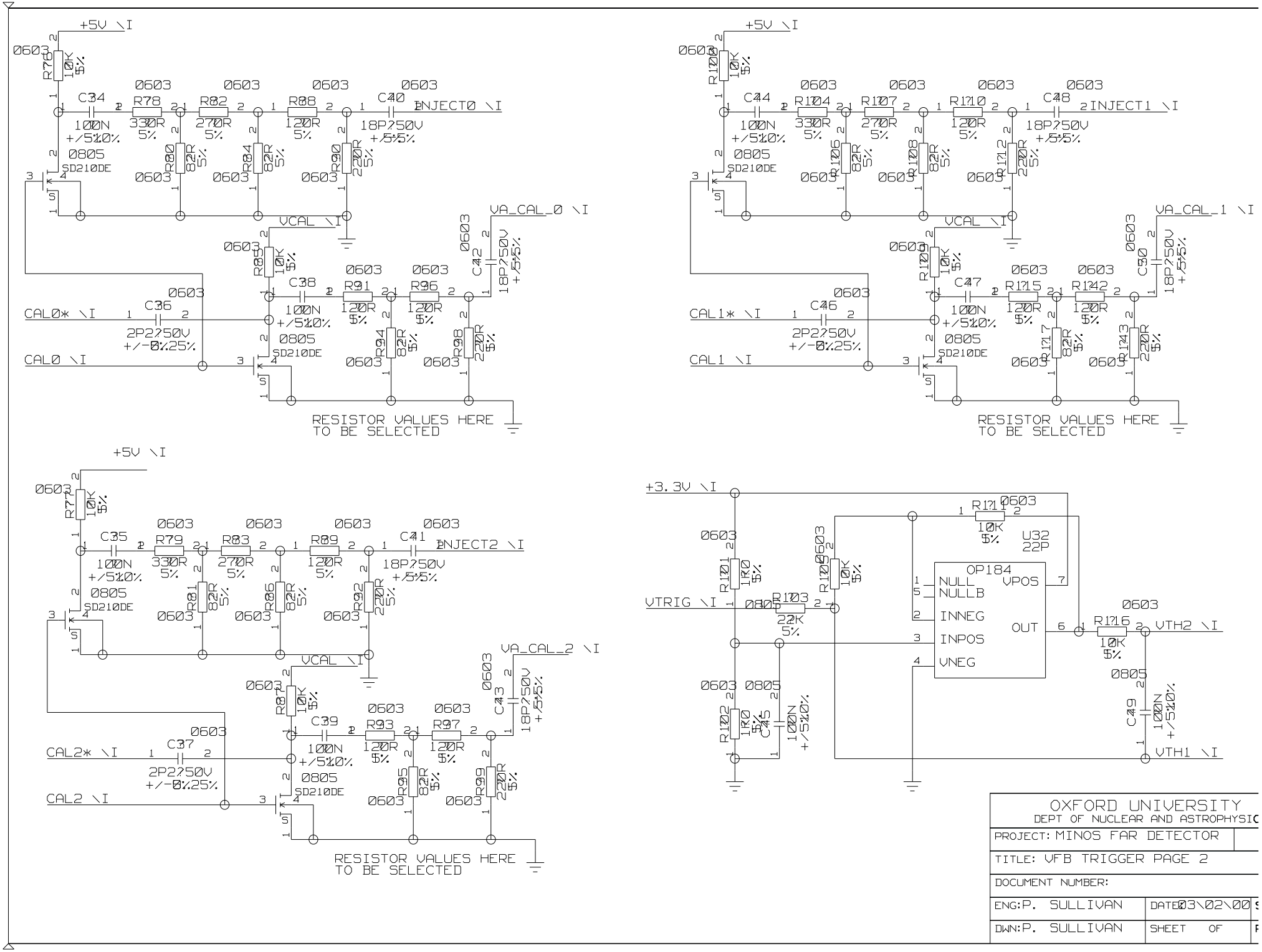
+5V \I
R76 10K 5%
C34 100N +/-5%10% 0805
R78 330R 5%
R82 270R 5%
R88 120R 5%
C40 18P?50V +/-5%5%
INJECT0 \I
R80 82R 5%
R84 82R 5%
R90 220R 5%
SD210DE
VCAL \I
VA_CAL_0 \I
R85 10K 5%
C38 100N +/-5%10% 0805
R91 120R 5%
R96 120R 5%
C42 18P?50V +/-5%5%
C36 2P2?50V +/-0%25%
CAL0* \I
CAL0 \I
R94 82R 5%
R98 220R 5%
RESISTOR VALUES HERE
TO BE SELECTED
R100 10K 5%
C44 100N +/-5%10% 0805
R104 330R 5%
R107 270R 5%
R110 120R 5%
C48 18P?50V +/-5%5%
INJECT1 \I
R106 82R 5%
R108 82R 5%
R112 220R 5%
VA_CAL_1 \I
R109 10K 5%
C47 100N +/-5%10% 0805
R115 120R 5%
R142 120R 5%
C50 18P?50V +/-5%5%
C46 2P2?50V +/-0%25%
CAL1* \I
CAL1 \I
R117 82R 5%
R143 220R 5%
R77 10K 5%
C35 100N +/-5%10% 0805
R79 330R 5%
R83 270R 5%
R89 120R 5%
C41 18P?50V +/-5%5%
INJECT2 \I
R81 82R 5%
R86 82R 5%
R92 220R 5%
VA_CAL_2 \I
R87 10K 5%
C39 100N +/-5%10% 0805
R93 120R 5%
R97 120R 5%
C43 18P?50V +/-5%5%
C37 2P2?50V +/-0%25%
CAL2* \I
CAL2 \I
R95 82R 5%
R99 220R 5%
+3.3V \I
R111 10K 5%
U32 22P
OP184
NULL
NULLB
INNEG
INPOS
VNEG
VPOS
OUT
R101 1R0 5%
R105 10K 5%
VTRIG \I
R103 22K 5%
R116 10K 5%
VTH2 \I
R102 1R0 5%
C45 100N +/-5%10%
C49 100N +/-5%10%
VTH1 \I
OXFORD UNIVERSITY
DEPT OF NUCLEAR AND ASTROPHYSIC
PROJECT: MINOS FAR DETECTOR
TITLE: VFB TRIGGER PAGE 2
DOCUMENT NUMBER:
ENG: P. SULLIVAN
DATE 03\02\00
DWN: P. SULLIVAN
SHEET OF

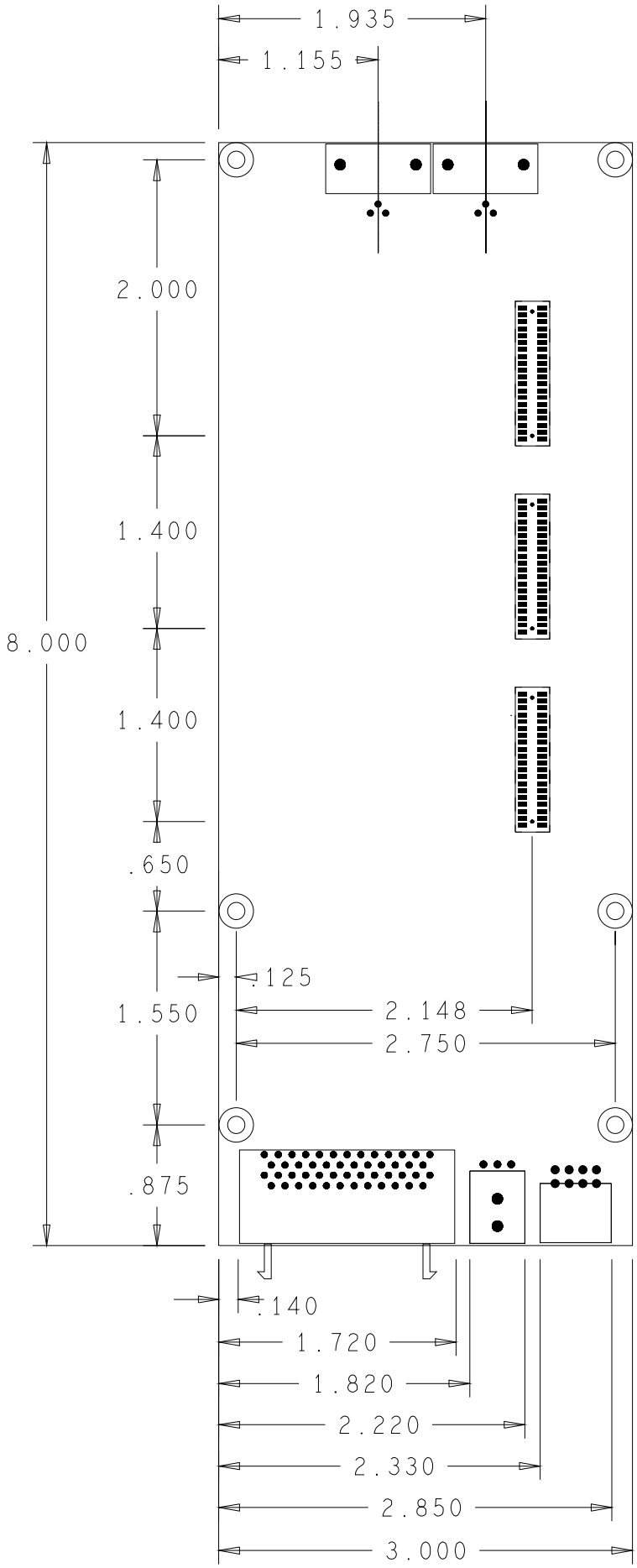

NOTES

1. VIEW FROM TOP OF BOARD- STACKER SOCKETS ARE UNDERNEATH
2. FIXING HOLES ARE CLEARANCE FOR 4-40 STUDS OR SCREWS
3. DIMENSIONS IN INCHES.
4. STACKER POSITIONS ARE MARKED BY BOTTOM ALIGNMMENT PIP
5. STACKER PIN 1 IS AT BOTTOM LEFT CONTACT AS VIEWED.
6. POSITIONS OF BOARD I/O CONNECTORS ARE SHOWN ALONG BOTTOM EDGE, AND ARE LEFT TO RIGHT:
   DIGITAL (HEIGHT = 0.36 INCH)
   ANALOGUE (HEIGHT = 0.375 INCH)
   POWER (HEIGHT = 0.2 INCH)
7. POSITIONS OF PIN DIODE CONNECTORS ARE SHOWN ON TOP EDGE OF BOARD. (HEIGHT = 0.375 INCH)
   OPTICAL FIBRE EXITS FROM CONNECTOR CENTRE
   CLEARANCE HOLE FOR OPTICAL CONNECTOR = 0.5 INCH

DRAWING STATUS: UNDER DEVELOPMENT
DATE: 04/04/2000

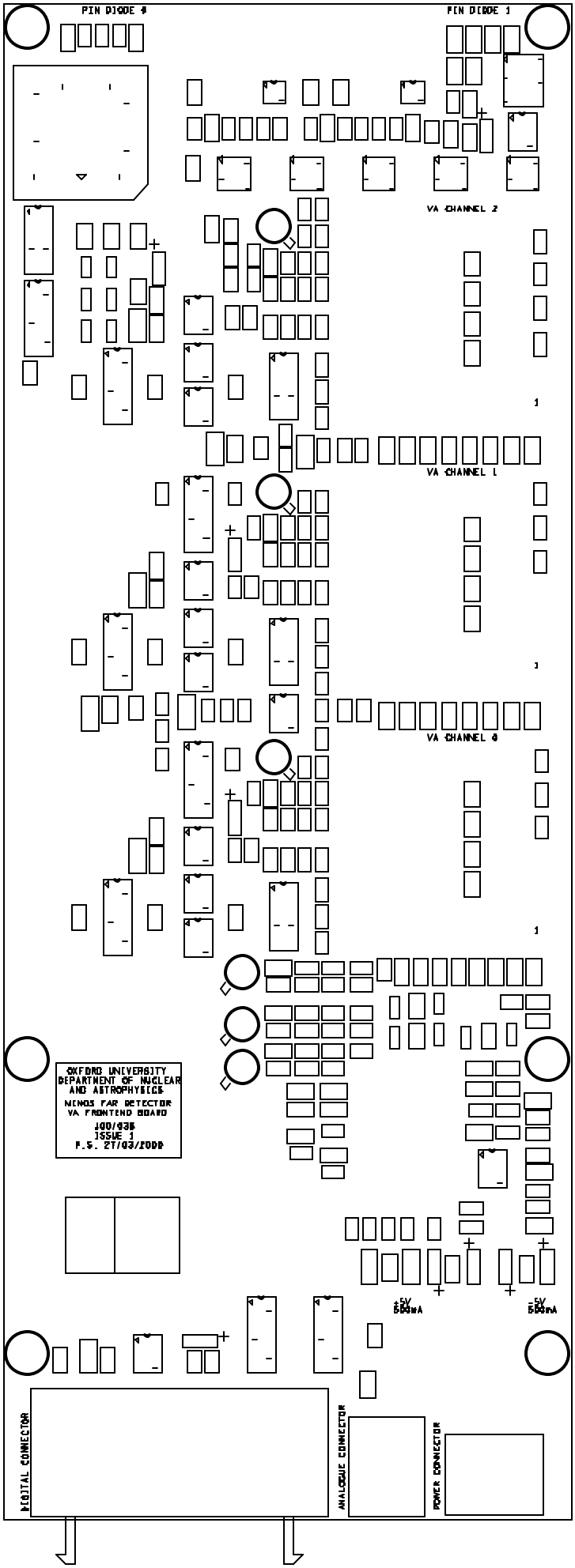
PIN DIODE 4
PIN DIODE 1
VA CHANNEL 2
VA CHANNEL 1
VA CHANNEL 4
OXFORD UNIVERSITY
DEPARTMENT OF NUCLEAR
AND ASTROPHYSICS
MINOS FAR DETECTOR
VA FRONTEND BOARD
J00/036
ISSUE 1
P.S. 27/03/2000
+5V
500mA
-5V
500mA
DIGITAL CONNECTOR
ANALOGUE CONNECTOR
POWER CONNECTOR

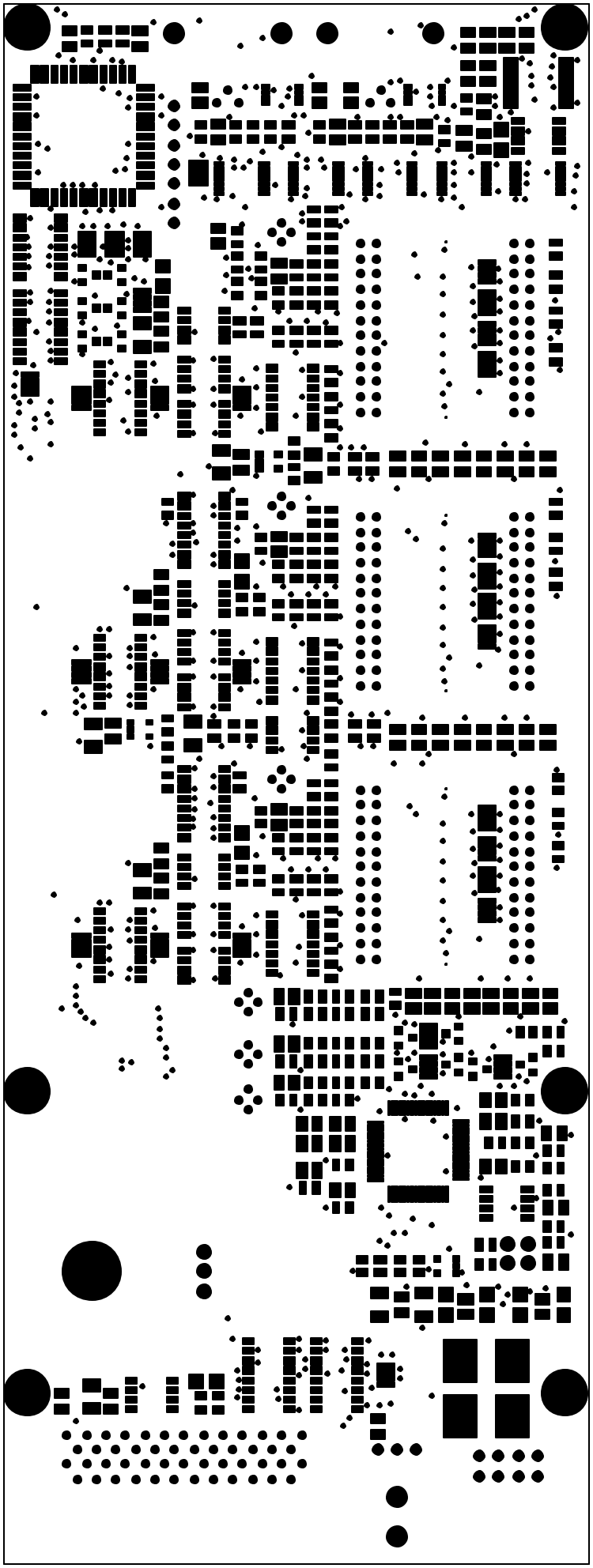

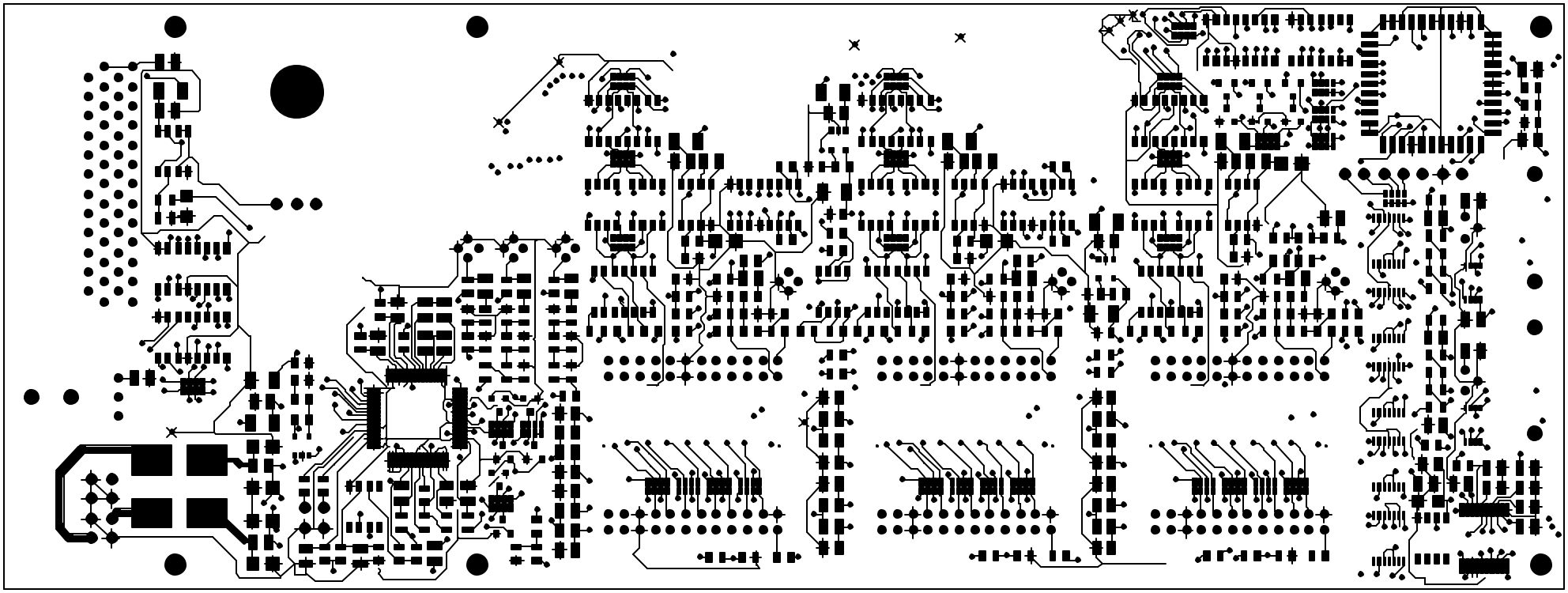

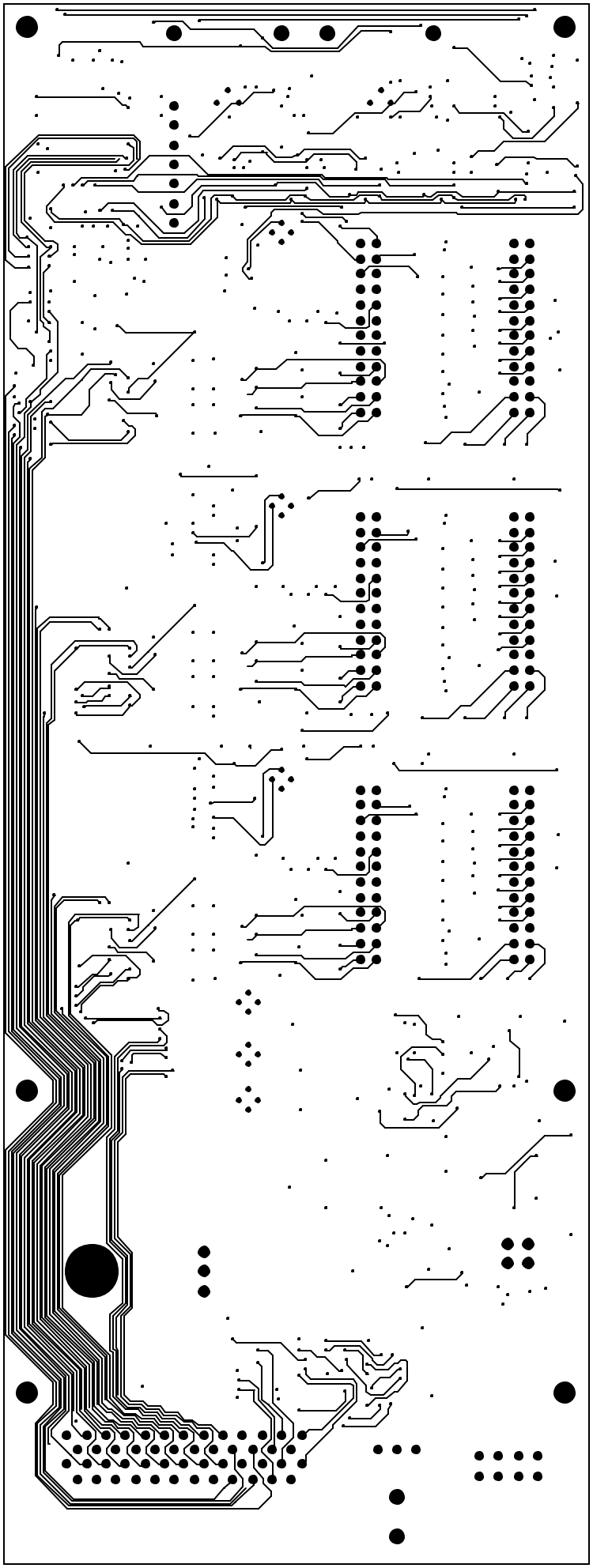

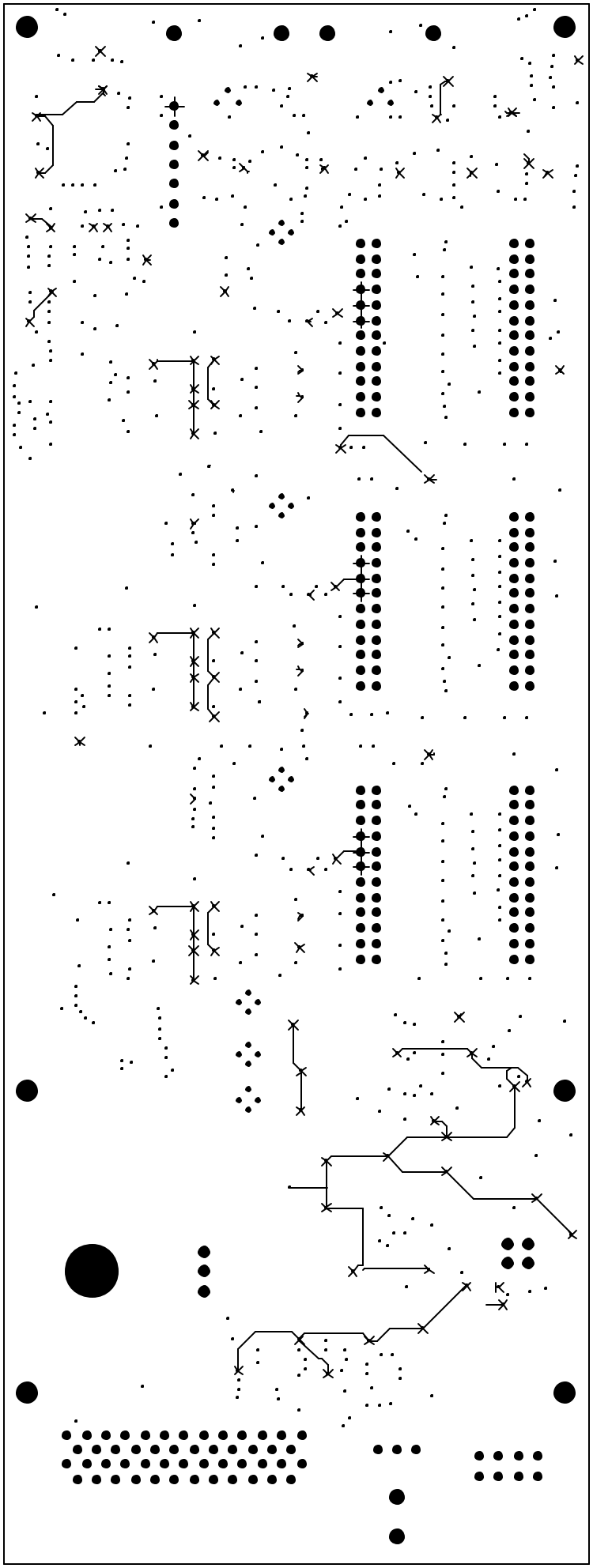

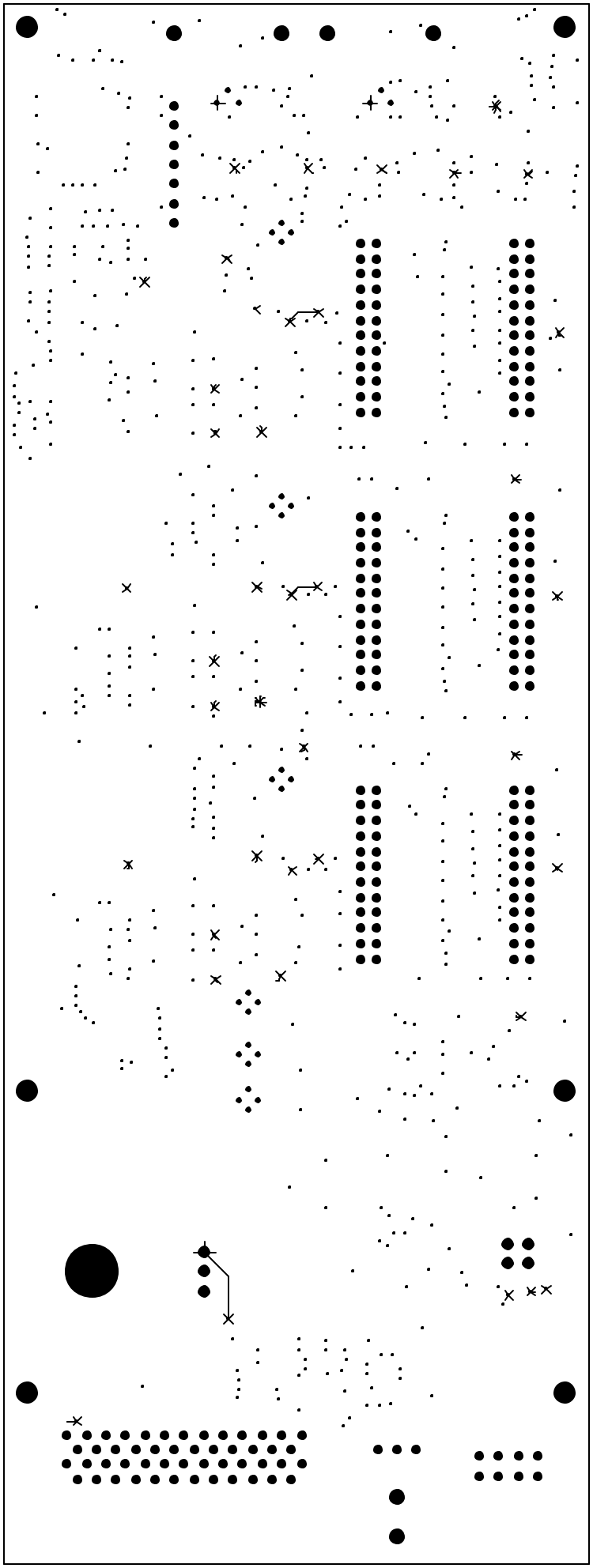

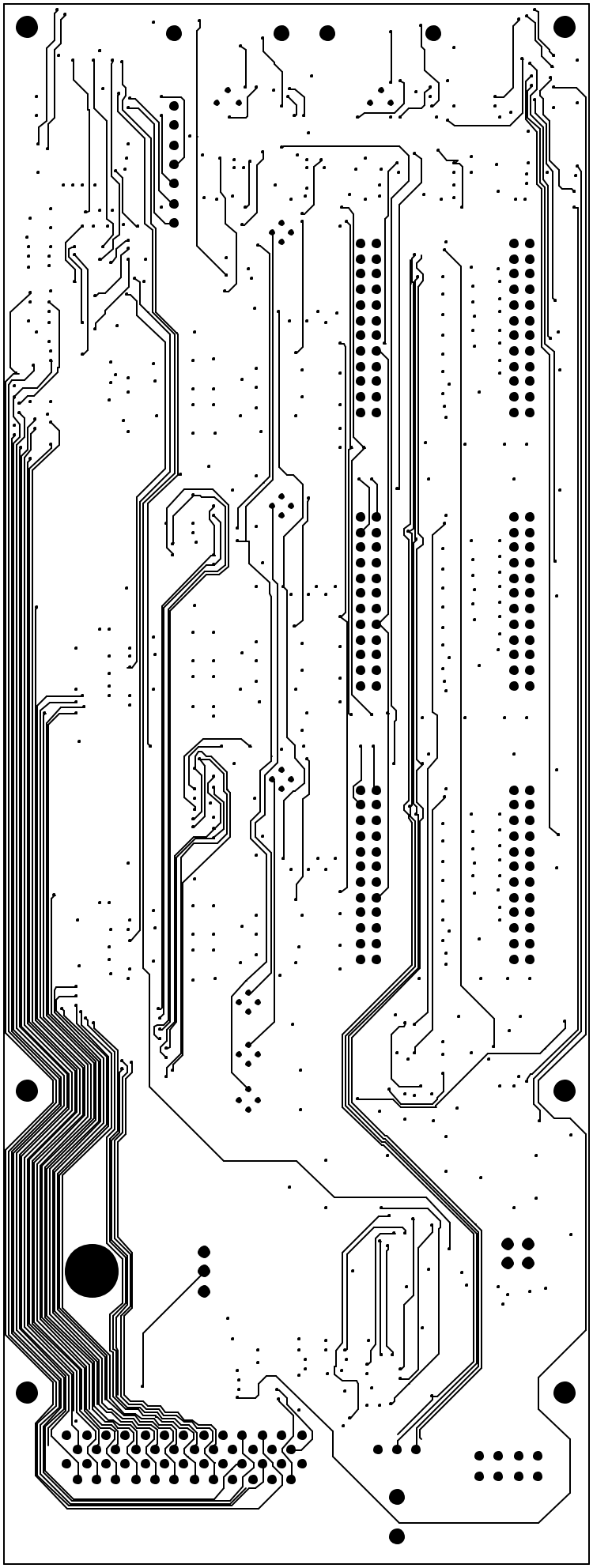

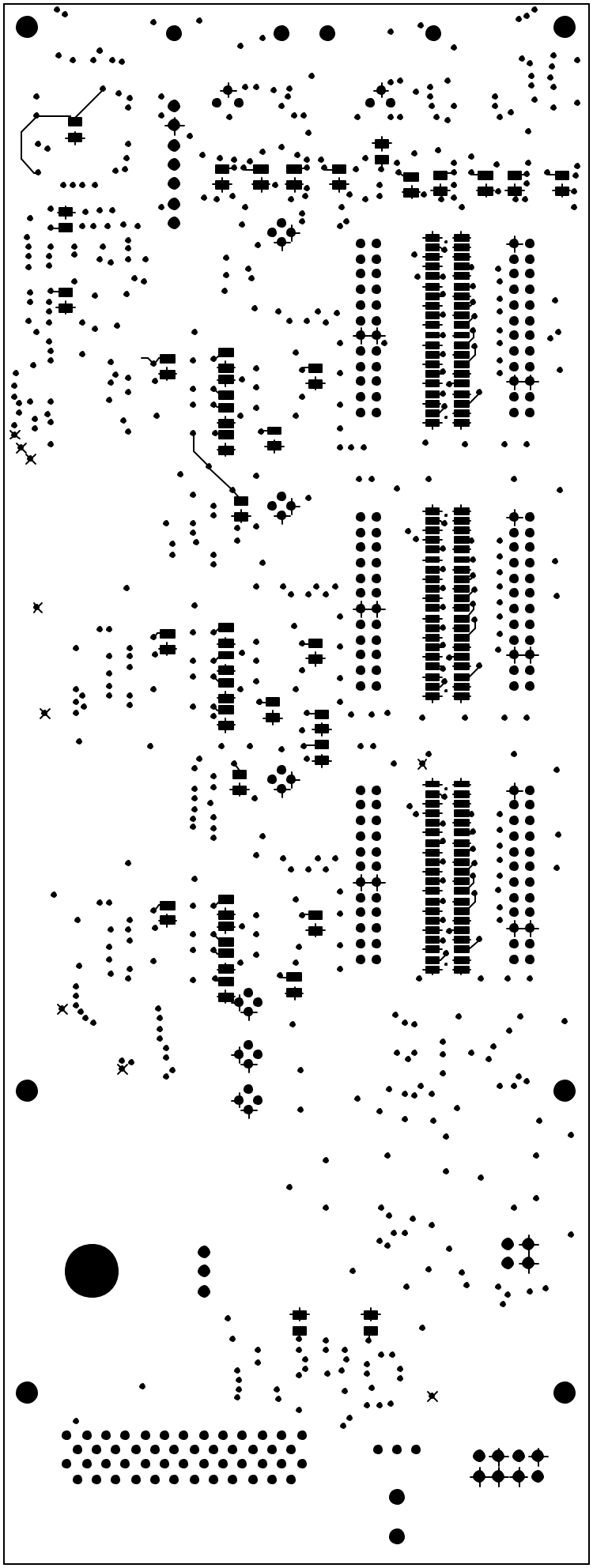

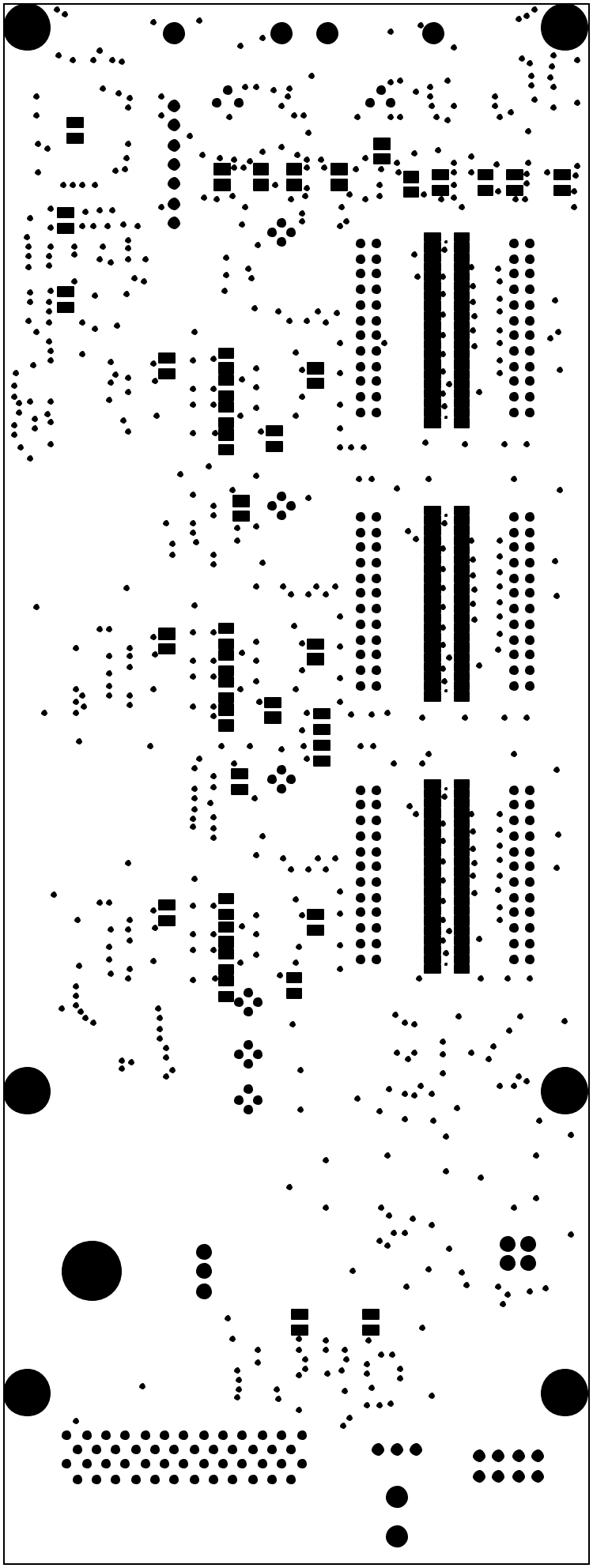

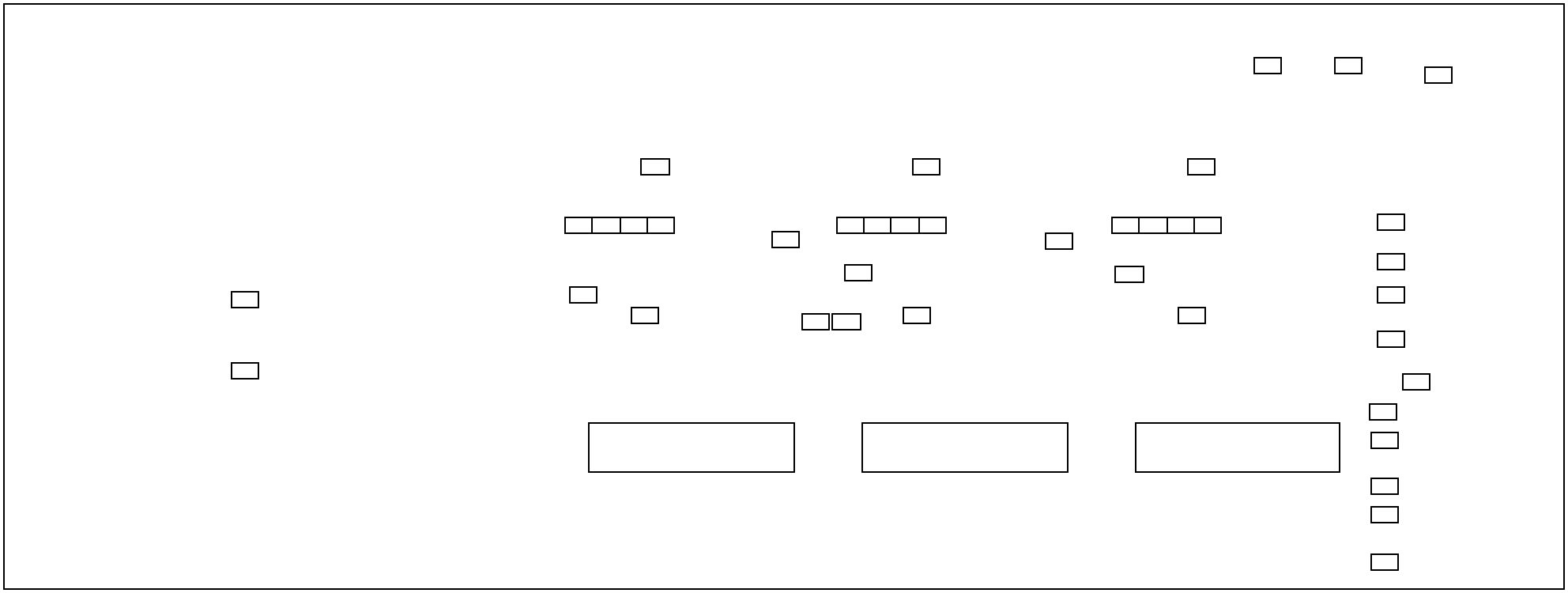

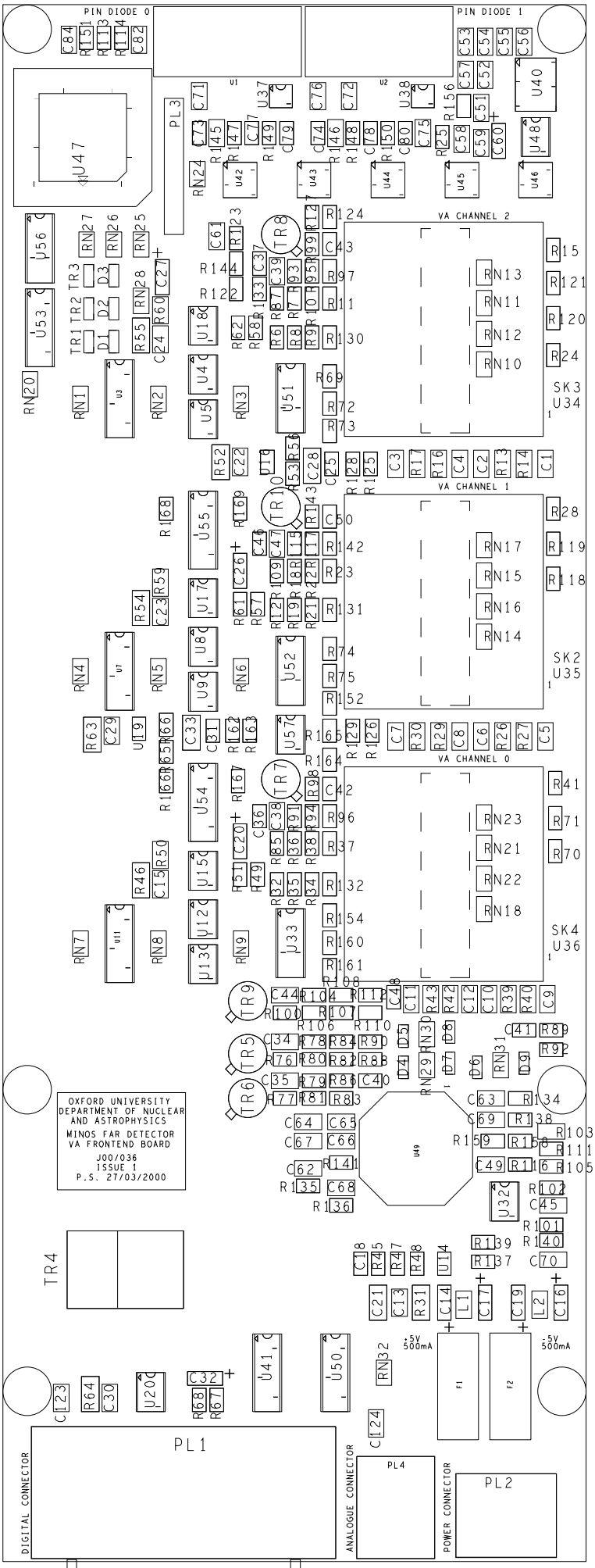
PIN DIODE 0
PIN DIODE 1
VA CHANNEL 2
VA CHANNEL 1
VA CHANNEL 0
SK3
U34
SK2
U35
SK4
U36
OXFORD UNIVERSITY
DEPARTMENT OF NUCLEAR
AND ASTROPHYSICS
MINOS FAR DETECTOR
VA FRONTEND BOARD
J00/036
ISSUE 1
P.S. 27/03/2000
TR4
PL1
PL2
PL3
PL4
DIGITAL CONNECTOR
ANALOGUE CONNECTOR
POWER CONNECTOR
+5V
500mA
-5V
500mA

Title:	**Bill of Materials**			
Design:	**MINOS_VFB1**			
Date:	**Mar 29 2000**			
Template:	**/cadence5/98/tools/interface/bom.template**			
Issue Status:	**Prototype 1**			
Ref	**Description**	**Manufacturer**	**Part Number**	**Quantity**
C79,C80	CAPACITOR_0603-10P/50V,		Farnell 721-967	2
	+/-5%,PA			
C18,C25,	CAPACITOR_0603-18P/50V,		Farnell 721-992	9
C31,	+/-5%,PA			
C40-C43,				
C48,C50				
C36,C37,	CAPACITOR_0603-2P2/50V,		Farnell 721-888	3
C46	+/-0.25A			
C73,C74,	CAPACITOR_0603-4P7/50V,		Farnell 721-920	4
C77,C78	+/-0.25A			
C1-C13,	CAPACITOR_0805-100N,	AVX-KYOCERA	Farnell 499-687	94
C15,	+/-10%,AVXA	CM21X7R104K25VA		
C22-C24,				
C29,C30,				
C34,C35,				
C38,C39,				
C44,C45,				
C47,C49,				
C51-C59,				
C61-C72,				
C75,C76,				
C81-C124				
C21,C28,	CAPACITOR_1206-1U0,	AVX	Farnell 499-717	3
C33	+/-10%,AVX	CM316X7R105K16V		
C14,C16,	CAPACITOR_CASE-A-10U,	NEC	Flint	9
C17,C19,	+/-20%,NEC	NRA106M06	NRA106M06	
C20,C26,				
C27,C32,				
C60				
D4-D9	Series Diode Pair SOT23 pack	Zetex	BAV99	6
D1-D3	Common Anode Diode Pair SOT23	Philips	BAW56	3
F1,F2	500mA Fuse & holder	Littelfuse	154500	2
LK1,LK2	0.1" pitch 2 pin header	Molex	-	2
L1,L2	3NH_INDUCTOR	AVX (farnell p585)	L08053R3DEW	2
PL1	4 row RH 50 way header	Thomas & Betts	311-050072E	1 * 5
PL2	VFB_POWER_CONN	Molex RA PC mount	90130 4212	1 *5
PL3	PROGHEADER	?	?	1
PL4	Analogue Connector 3 pin	Gore		1 *5
RN1,RN4,	RESISTOR-NET-4I_SMD-100R,		Farnell 776-646	17
RN7,	5%,PHA			
RN10-RN18,				
RN20-RN23,				
RN32				
RN24-RN26,	RESISTOR-NET-4I_SMD-10K,	PHIA	Farnell 776-762	4
RN28				
RN3,RN6,	RESISTOR-NET-4I_SMD-2K2,	PHIA	Farnell 776-725	3
RN9				
RN2,RN5,	RESISTOR-NET-4I_SMD-330R,	PHIA	Farnell 776-671	3
RN8				

RN29-RN31	RESISTOR-NET-4I_SMD-33R,	PHIA	Farnell 776-610	3
RN27	RESISTOR-NET-4I_SMD-4K7,	PHIA	Farnell 776-749	1
R45	RESISTOR_0603-100K,1%,	ROHM	Farnell 911471	1
R158,R159	RESISTOR_0603-100K,5%,	ROHM	Farnell 612728	2
R15,R28,	RESISTOR_0603-100R,1%,	ROHM	MCR03EZPF101	7
R41,				
R166-R169				
R70,R71,	RESISTOR_0603-10K,0.1%,	MEGGIT	Farnell 433123	8
R118-R122,				
R144				
R24,R25,	RESISTOR_0603-10K,1%,ROHM	ROHM	MCR03EZPF103	15
R47,R76,				
R77,R85,				
R87,R100,				
R105,R109,				
R111,R113,				
R114,R116,				
R151				
R91,R93,	RESISTOR_0603-120R,1%,	ROHM	Farnell 911124	6
R96,R97,				
R115,R142				
R88,R89,	RESISTOR_0603-120R,5%,	ROHM	Farnell 612376	3
R110				
R49,R57,	RESISTOR_0603-150K,1%,	MULTICOMP	Farnell 911495	4
R48	RESISTOR_0603-180K,1%,	MULTICOMP	FARNELL 911501	1
R101,R102	RESISTOR_0603-1K0,1%	ROHM	MCR03EZPF102	2
R6-R12,	RESISTOR_0603-1K0,5%	ROHM	MCR03EZHJ102	39
R18,R19,				
R21-R23,				
R32,				
R34-R38,				
R69,				
R72-R75,				
R124-R133,				
R141,R152,				
R154,R156,				
R160,R161				
R98,R99,	RESISTOR_0603-220R,1%,	ROHM	MCR03EZPF221	3
R143				
R90,R92,	RESISTOR_0603-220R,5%,	ROHM	MCR03EZHJ221	5
R112,R147,				
R148				
R82,R83,	RESISTOR_0603-270R,5%,	ROHM	Farnell 612418	3
R107				
R149,R150,	RESISTOR_0603-2K2,5%,ROHM	ROHM	Farnell 612522	4
R164,R165				
R78,R79,	RESISTOR_0603-330R,5%,	ROHM	Farnell 612420	5
R104,R162,				
R163				
R56,R66	RESISTOR_0603-33K,1%,	MULTICOMP	Farnell 911410	2
R137,R139	RESISTOR_0603-47R,1%,ROHM	ROHM	RS 213-2092	2

R123,	RESISTOR_0603-4R7,5%,ROHM	ROHM	MCR03EZHJ4R7	6	
R134-R136,					
R138,R140					
R53,R65	RESISTOR_0603-56K,1%,	MULTICOMP	Farnell 911446	2	
R51,R61,	RESISTOR_0603-82K,1%,	MULTICOMP	Farnell 911460	4	
R62,R68					
R94,R95,	RESISTOR_0603-82R,1%,ROHM	ROHM	Farnell 911352	3	
R117					
R80,R81,	RESISTOR_0603-82R,5%,ROHM	ROHM	Farnell 612100	6	
R84,R86,					
R106,R108					
R50,R59,	RESISTOR_0805-15R,5%,CAT		Farnell 612-870	3	
R60					
R145,R146	RESISTOR_0805-10M,5%,CAT		Farnell	2	
R103	RESISTOR_0805-22K,5%,CAT		Farnell 613-253	1	
R13,R14,	RESISTOR_0805-4R7,5%,ROHM	ROHM	MCR10EZHJ4R7E	12	
R16,R17,					
R26,R27,					
R29,R30,					
R39,R40,					
R42,R43					
R31,R46,	RESISTOR_1206-4R7,2%,CAT		Farnell 419-928	7	
R52,R54,					
R55,R63,					
R64					
SK2-SK4	Board Stacker Connector SM	Samtec	CLP-120-02-G-D-A	3	
TR1-TR3	PNP transistor SOT23	Philips (FARNELL 549	BSR18A	3	
TR4	Power Transistor	Various	TIP32	1	
TR5-TR10	N Channel DMOS FET TO72 Pack	Siliconix	SD210DE	6	*30
U1,U2	PIN Diode and holder	Hamamatsu/Sussex U	S5971	2	
U3,U7,U11,	LVDS quad line Receiver SO16 pack	Nat Semi	DS90C032TM	7	
U50,					
U53-U55					
U4,U5,U8,	Dual Optocoupler SO8 pack	Hewlett Packard	HPCL0631SOIC	7	
U9,U12,					
U13,U57					
U14,U16,	120mA linear Reg SOT23-5 pack	Maxim	MAX8874REUK	3	
U19					
U15,U17,	ICL7664	Maxim	ICL7664ACSA	4	
U18,U20					
U32	Single Op Amp SO8 pack	Analogue Devices	OP184FS	1	
U33,U51,	INVERTER	Various	74F04	4	
U52,U56					
U34-U36	VA MODULE	IDE	?	3	
	VA MODULE Socket Strips	Harwin M22-6122522	RS 1320002		
U37,U38	Dual amp MSOP pack	Burr Brown	OPA2350EA	2	*10
U40	8ch 12bit ADC SSOP20 pack	Maxim	MAX186_CAP	1	*5
U41	LVDS quad line driver SO16 pack	Nat Semi	DS90C031TM	1	
U42-U46	Digital Pot. TSSOP14 pack	Analogue Devices	AD7376ARU10	5	
U47	In system programmable CPLD	Xilinx	1XC9536PLCC	1	*5
U48	Temp Sensor	Analogue Devices	AD22100KR	1	
U49	ASD_LITE	Harvard University	?	1	*5

MINOS VA Readout Controller (VARC) Board Description

Introduction

The VA Readout Controller (VARC) is a 6 layer printed circuit board. It receives signals and controls from 12 Front End Boards. For details of design and construction refer to attached pages of schematics, pcb layout and parts lists.

Materials and Construction

This is a 6 layer board made of FR4 material 0.093" thick. The top and bottom edges are milled to 0.062" to fit standard VME crate slots.

Traces are 1 oz copper.

Finish plating is solder mask over bare copper. The solder mask is green.

Board dimensions are standard for a 9U x 400mm VME module.

White silk screen on top and bottom layers.

Line width/space is 7 mils.

Vias are 13 mil plated through holes.

Board Layer description

Top layer holds components and traces.

Gnd layer is a copper ground plane layer.

Layer 2 includes traces and 2 separate +2.5V copper planes each powering 3 to 4 FPGA's.

Layer 3 includes traces and a +3.3V copper plane.

+5_0V layer is a copper power plane layer

Bottom layer has components and traces.

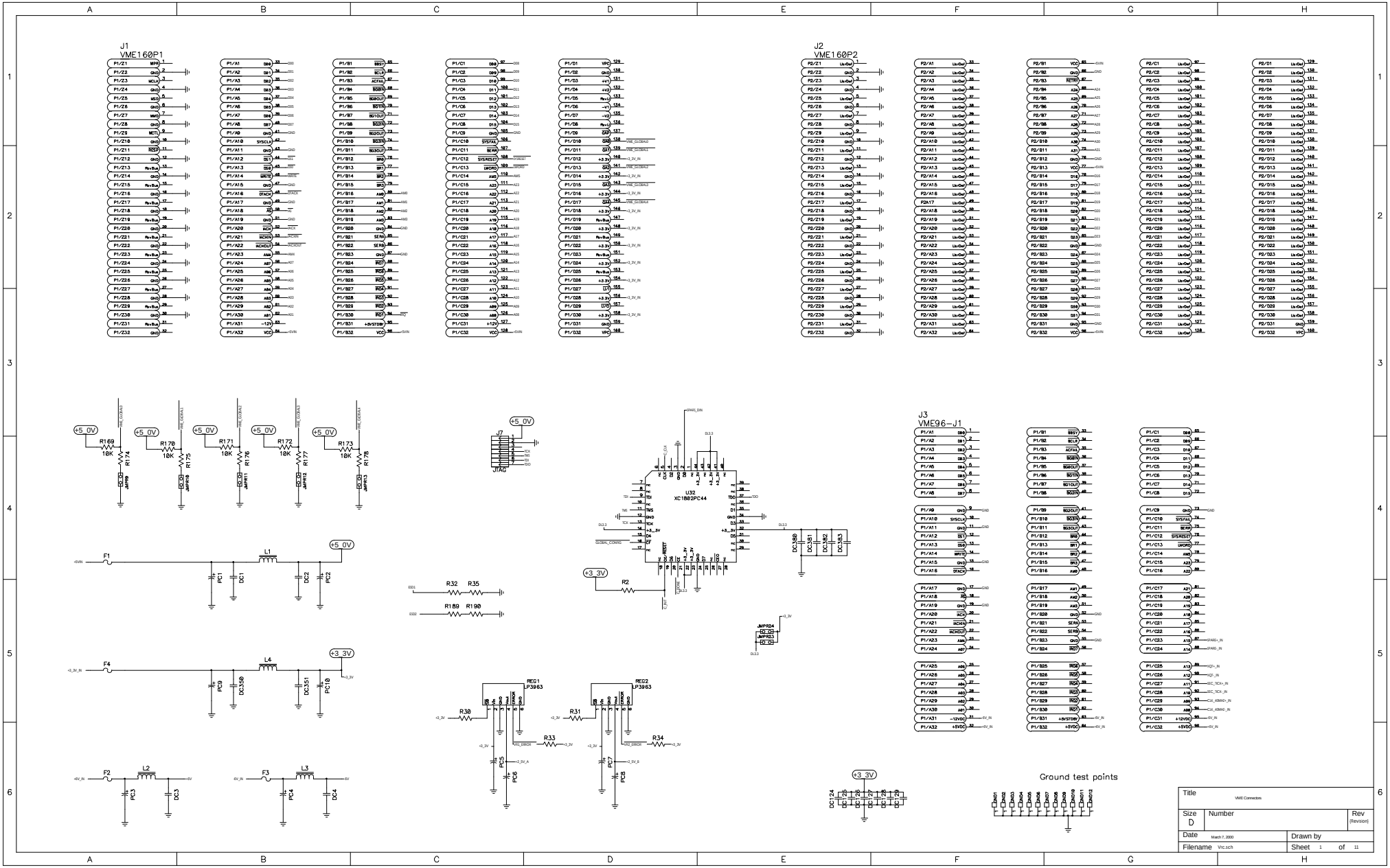
J1
VME160P1
J2
VME160P2
J3
VME96-J1
U32
XC18V02PC44
REG1
LP3963
REG2
LP3963
JTAG
Ground test points
Title
VME Connectors
Size
D
Number
Rev
(Revision)
Date
March 7, 2000
Drawn by
Filename
Vtc.sch
Sheet 1 of 11

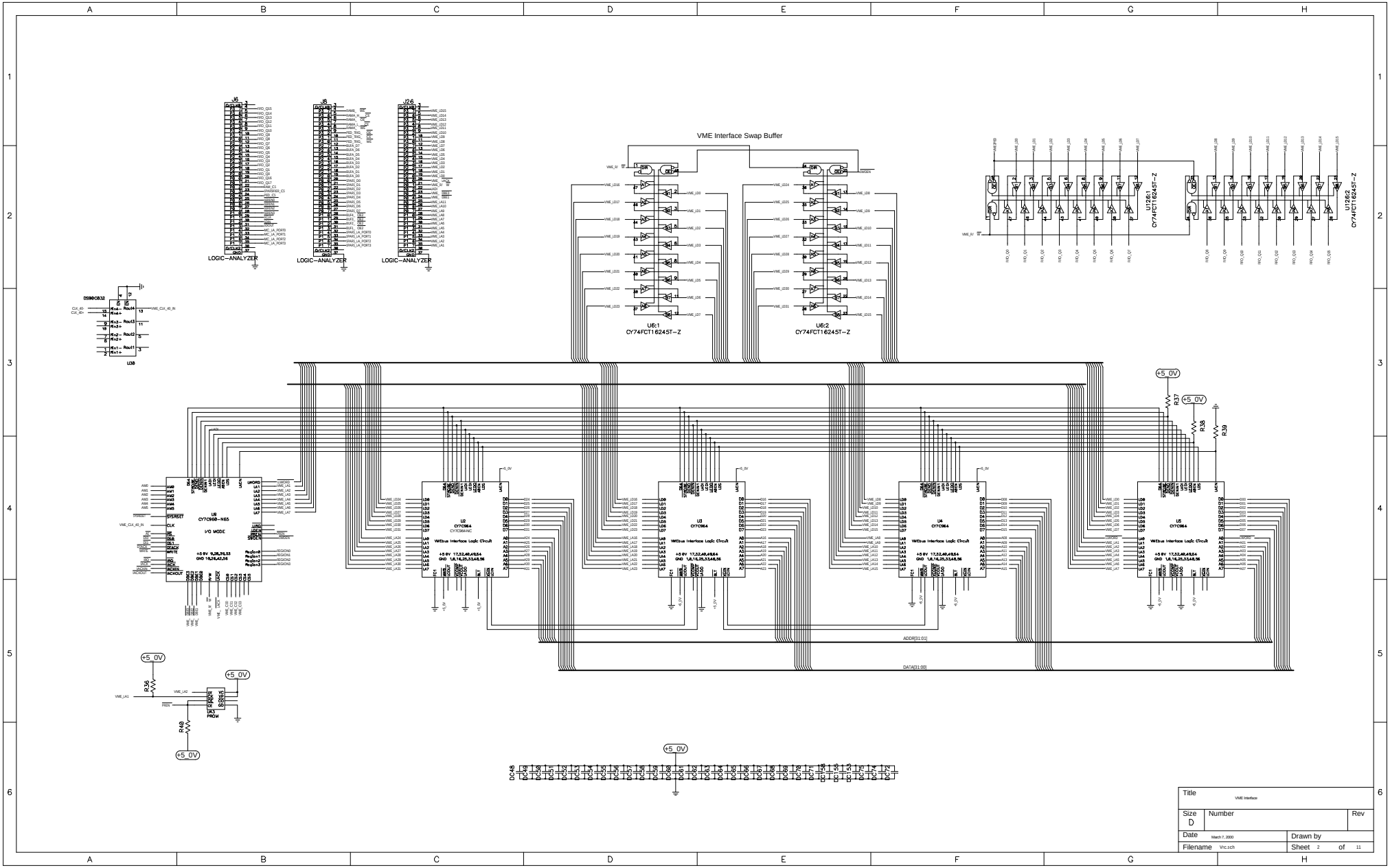
VME Interface Swap Buffer
LOGIC-ANALYZER
U6:1
CY74FCT16245T-Z
U6:2
CY74FCT16245T-Z
U126:1
CY74FCT16245T-Z
U126:2
CY74FCT16245T-Z
U8
CY7C960-N65
I/O MODE
U2
CY7C964
U3
CY7C964
U4
CY7C964
U5
CY7C964
VMEbus Interface Logic Circuit
U43
PROM
ADDR[31:01]
DATA[31:00]
+5_0V
Title
VME Interface
Size
D
Number
Rev
Date
March 7, 2000
Drawn by
Filename
Vic.sch
Sheet 2 of 11

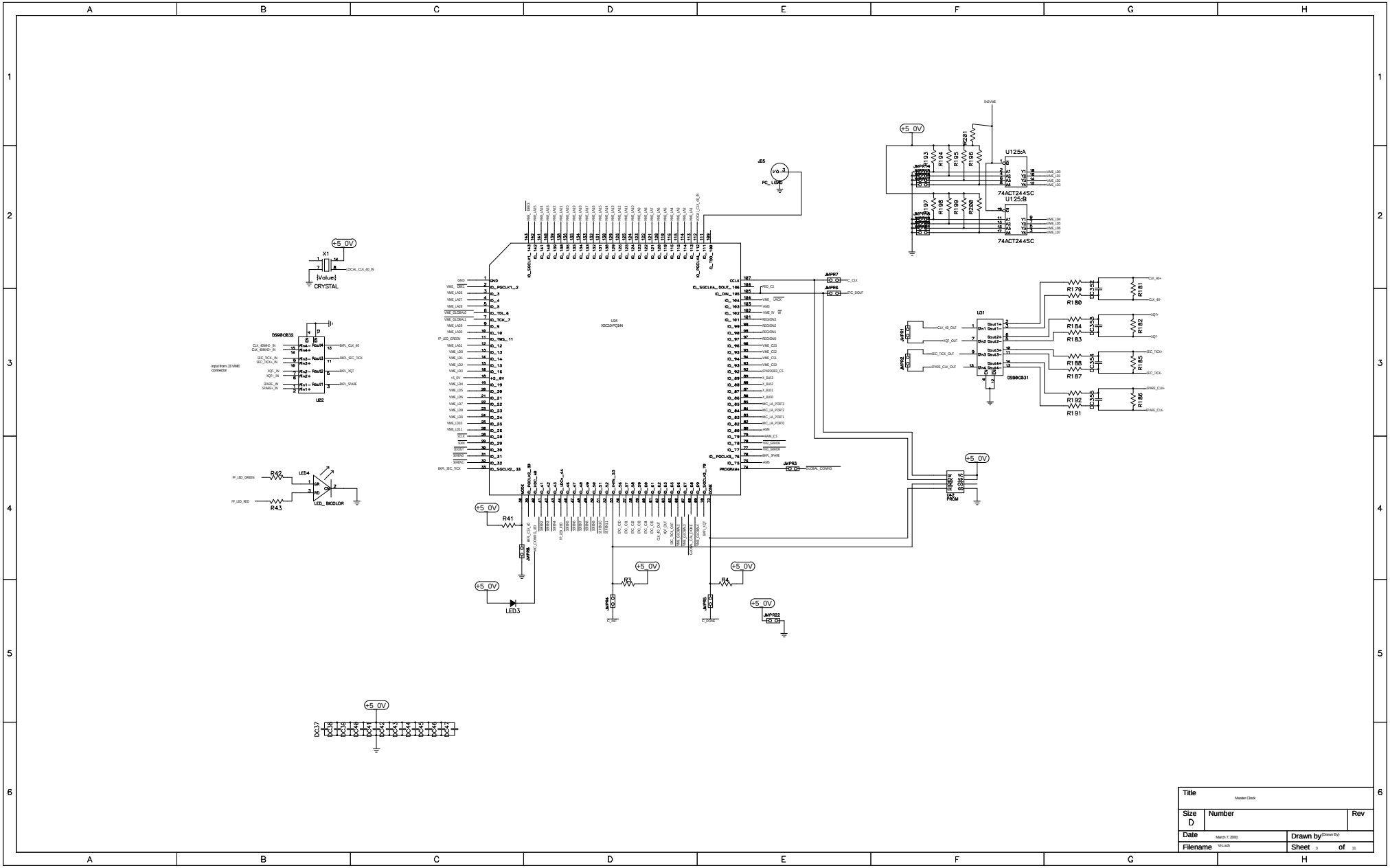

U125:A
74ACT244SC
U125:B
74ACT244SC
U31
DS90CB31
U2
DS90CB32
U24
XSC1SDPQ144
U25
PC_LEDS
X1
CRYSTAL
LED4
LED_BICOLOR
LED3
R41
R42
R43
R3
R4
R179
R180
R181
R184
R183
R182
R188
R187
R185
R192
R191
R186
R193
R194
R195
R196
R197
R198
R199
R200
R201
+5_0V
Title
Master Clock
Size
D
Number
Rev
Date
March 7, 2000
Drawn by
Filename
Sheet
3
of
11

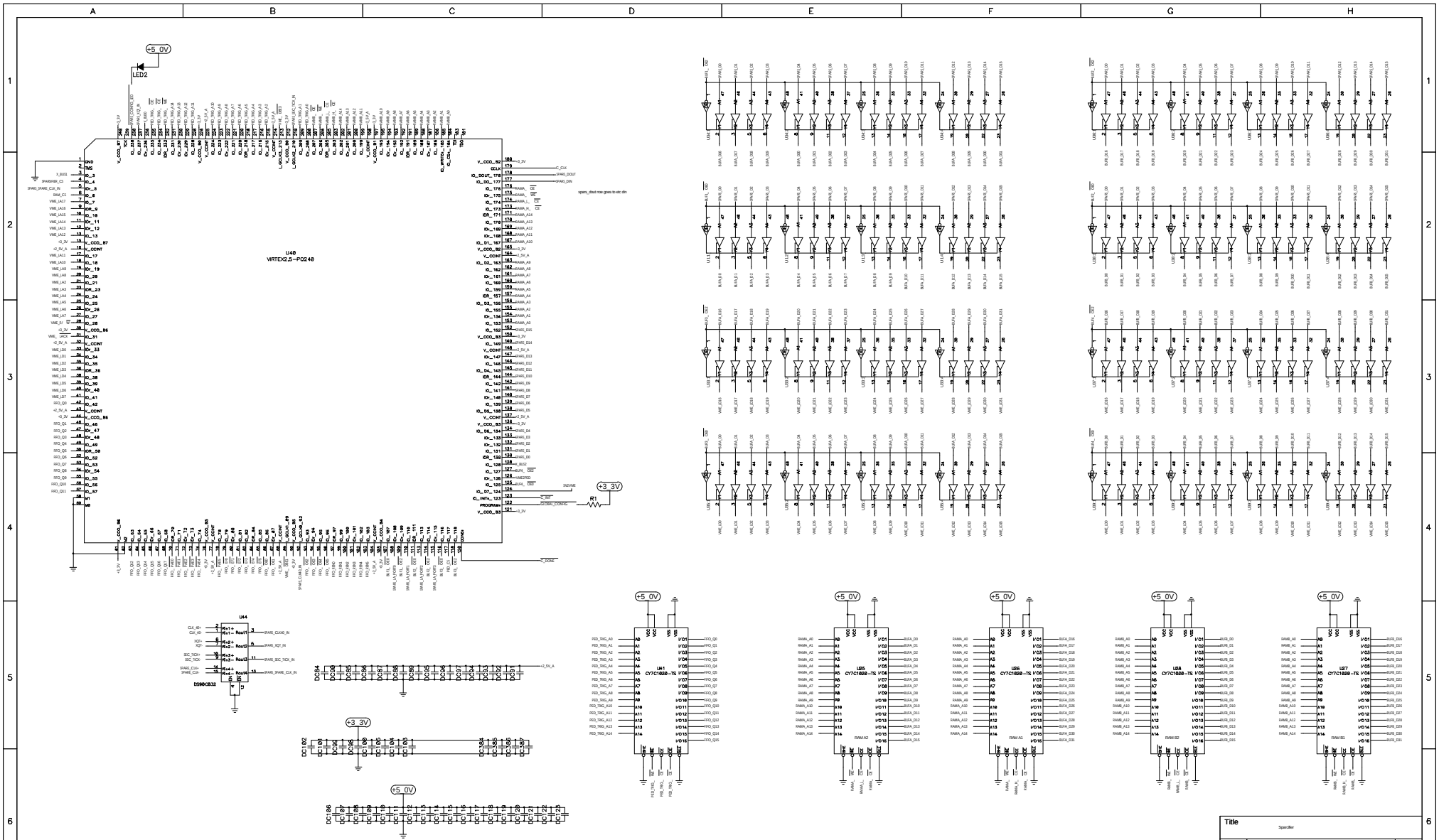

U40
VIRTEX2,5-PO240
LED2
+5 0V
+3 3V
R1
U44
DS90CB32
U41
CY7C1020-TS
U25
CY7C1020-TS
U26
CY7C1020-TS
U28
CY7C1020-TS
U27
CY7C1020-TS
RAM A2
RAM A1
RAM B2
RAM B1
Title
Spardler
Size
D
Number
Rev
Date
March 7, 2000
Drawn by
Filename
Vrcach
Sheet
4
of
11

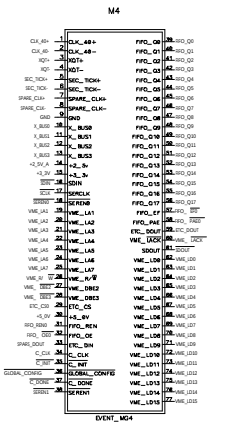

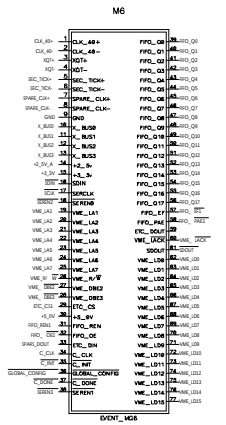

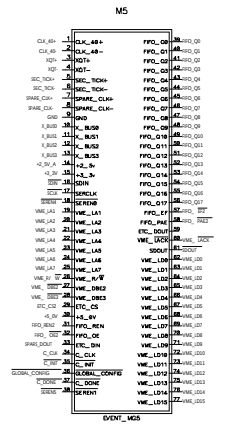

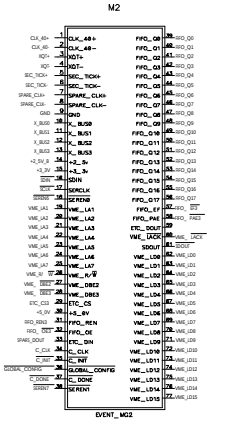

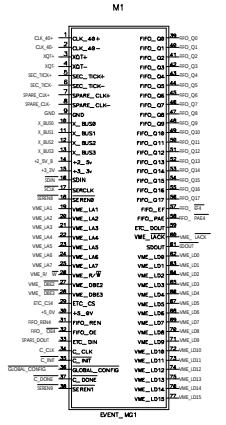

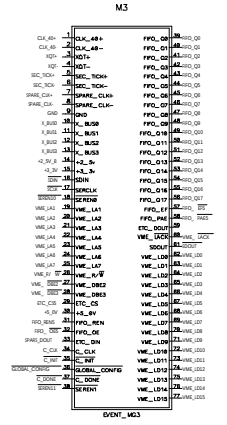

Title	1 of 6	
Size D	Number	Rev
Date	March 7, 2000	Drawn by [Drawn By]
Filename	Mc.sch	Sheet 1 of 11

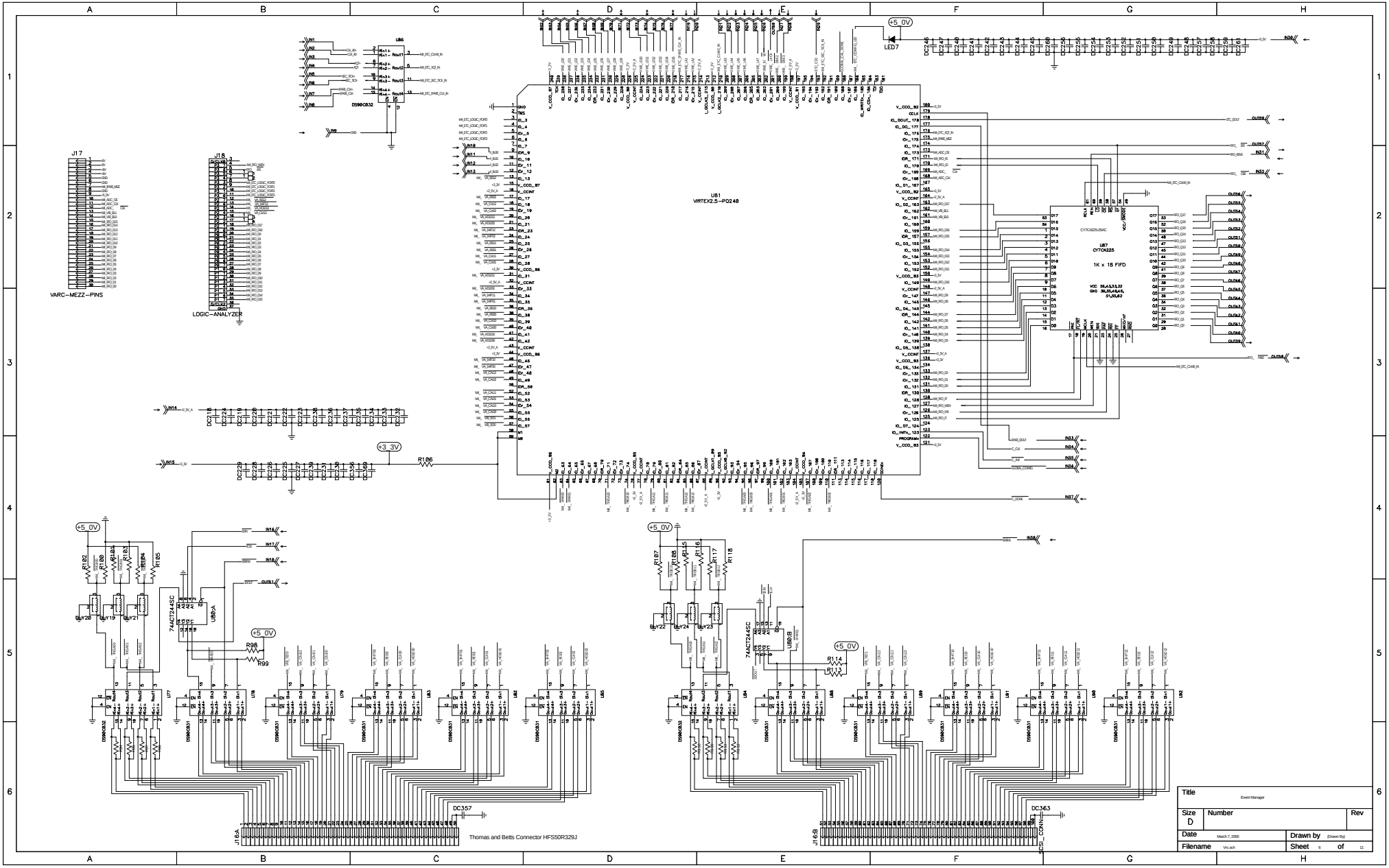

VARC-MEZZ-PINS
LOGIC-ANALYZER
U86
DS90C032
U81
VIRTEX2.5-P0240
U87
CY7C4225
1K x 18 FIFO
LED7
+5 0V
+3 3V
R106
74ACT244SC
U80:A
U80:B
DC357
DC363
J16A
J16B
Thomas and Betts Connector HFS50R329J
Title
Event Manager
Size
D
Number
Rev
Date
March 7, 2000
Drawn by
(Drawn By)
Filename
Vrc.sch
Sheet
6
of
11

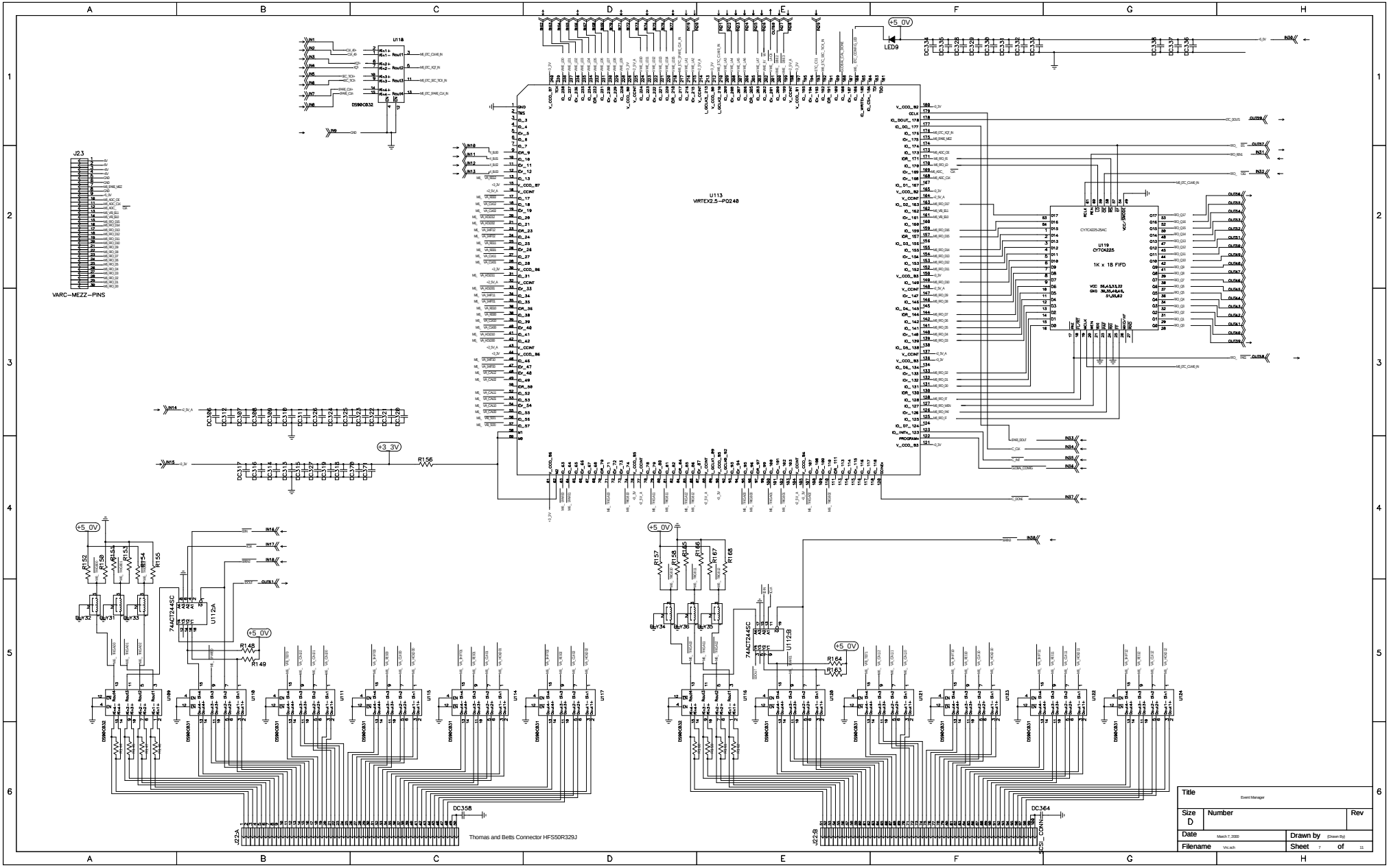

U113
VIRTEX2.5-PQ240
U119
CY7C4225
1K x 18 FIFO
VARC-MEZZ-PINS
J23
U118
DS90C032
U112A
U112B
74ACT244SC
+5.0V
+3.3V
LED9
DC358
DC364
J22A
J22B
SCSI_CONN
Thomas and Betts Connector HFS50R329J
Title
Event Manager
Size
D
Number
Rev
Date
March 7, 2000
Drawn by
(Drawn By)
Filename
Vrc.sch
Sheet
7
of
11

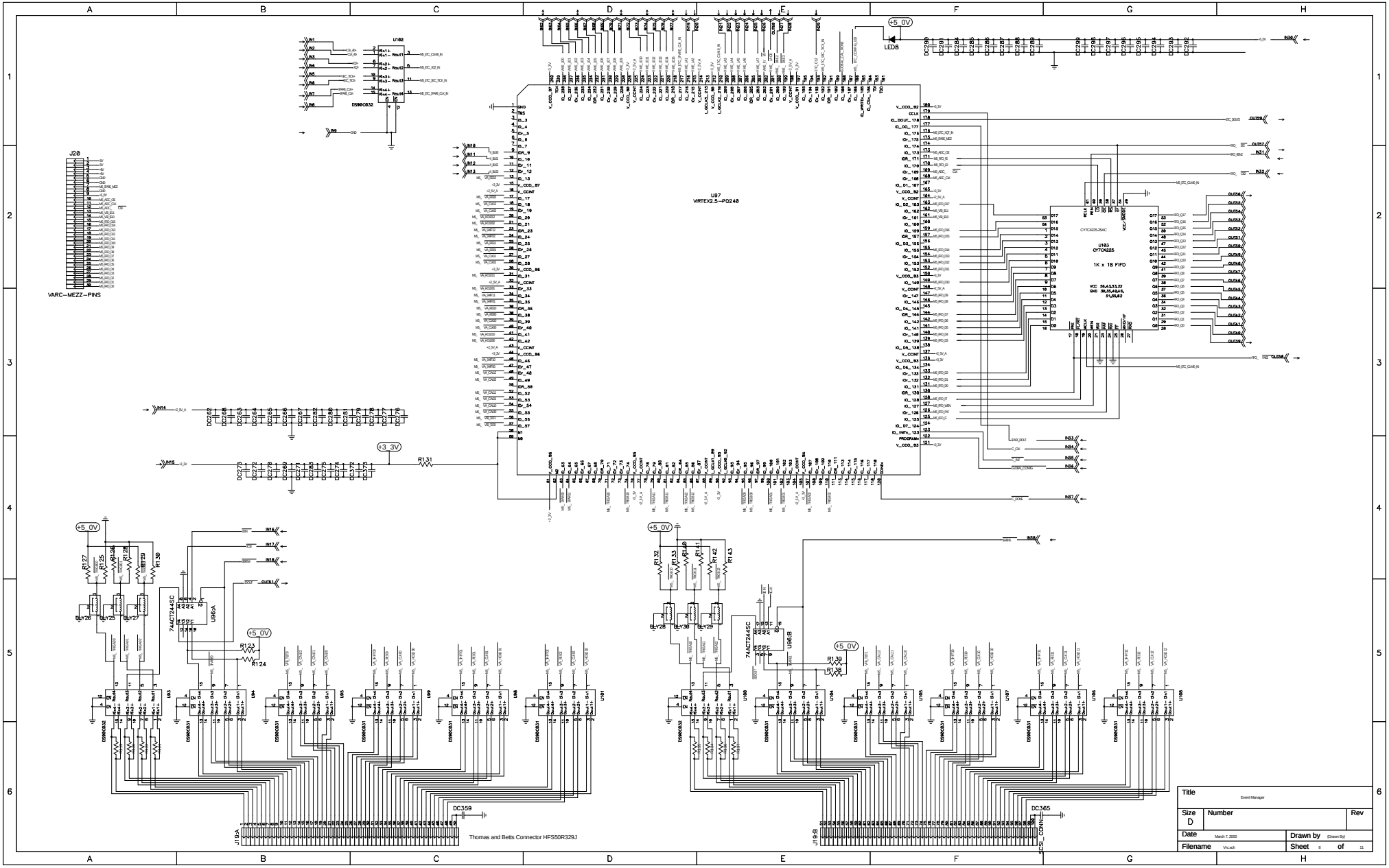

U102
DS90C032
J20
VARC-MEZZ-PINS
U97
VIRTEX2.5-PQ240
U103
CY7C4225
1K x 18 FIFO
+5 0V
LED8
+3 3V
R131
74ACT244SC
U96:A
U96:B
DC359
DC365
J19:A
J19:B
Thomas and Betts Connector HFS50R329J
Title
Event Manager
Size
D
Number
Rev
Date
March 7, 2000
Drawn by
(Drawn By)
Filename
Vrc.sch
Sheet
8
of
11

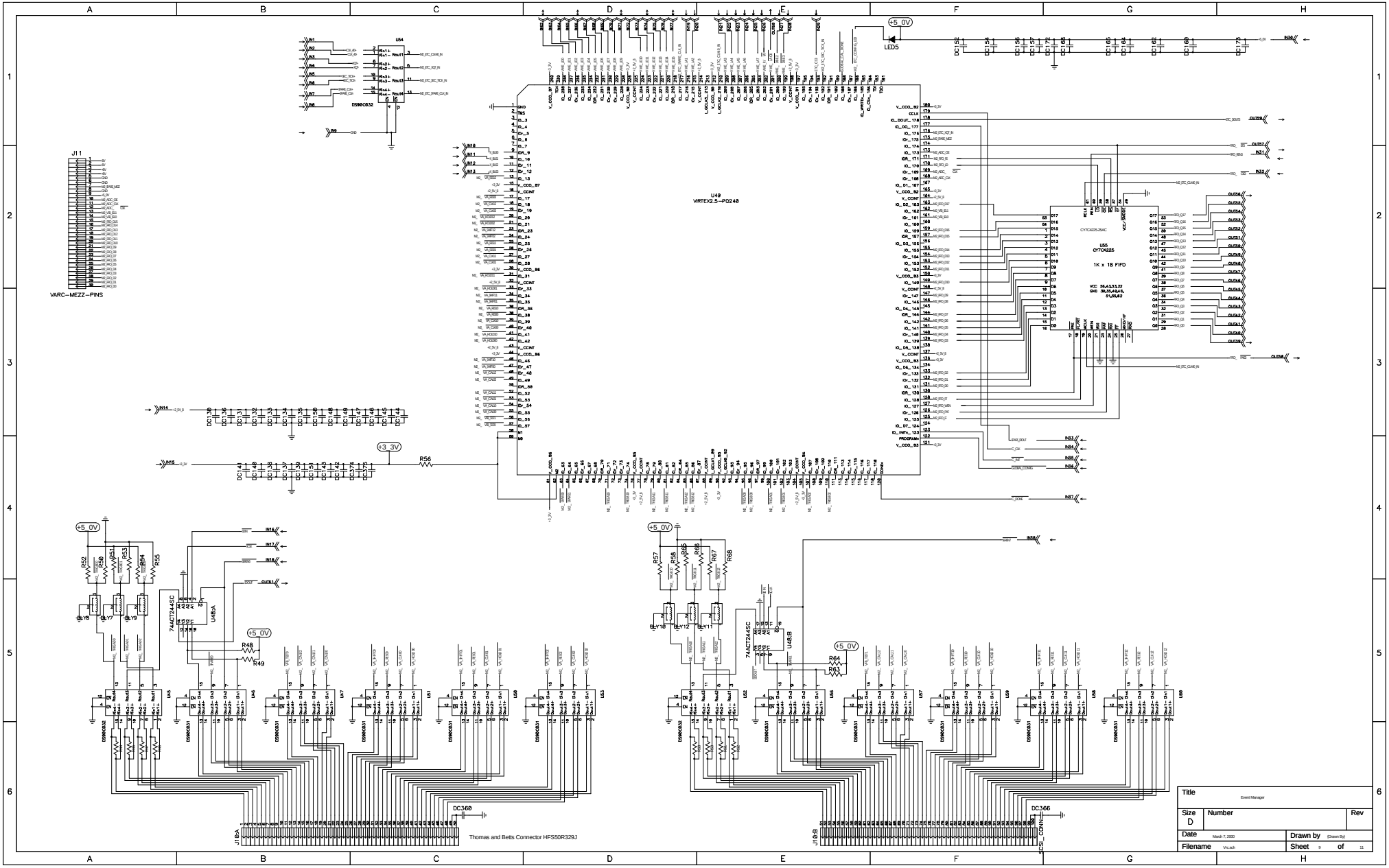

U49
VIRTEX2.5-PQ240
U55
CY7C4225
1K x 18 FIFO
U54
DS90C032
J11
VARC-MEZZ-PINS
+5 0V
+3 3V
LED5
74ACT244SC
U48:A
U48:B
DC360
DC366
J10:A
J10:B
Thomas and Betts Connector HFS50R329J
Title
Event Manager
Size
D
Number
Rev
Date
March 7, 2000
Drawn by
(Drawn By)
Filename
Vrc.sch
Sheet
9
of
11

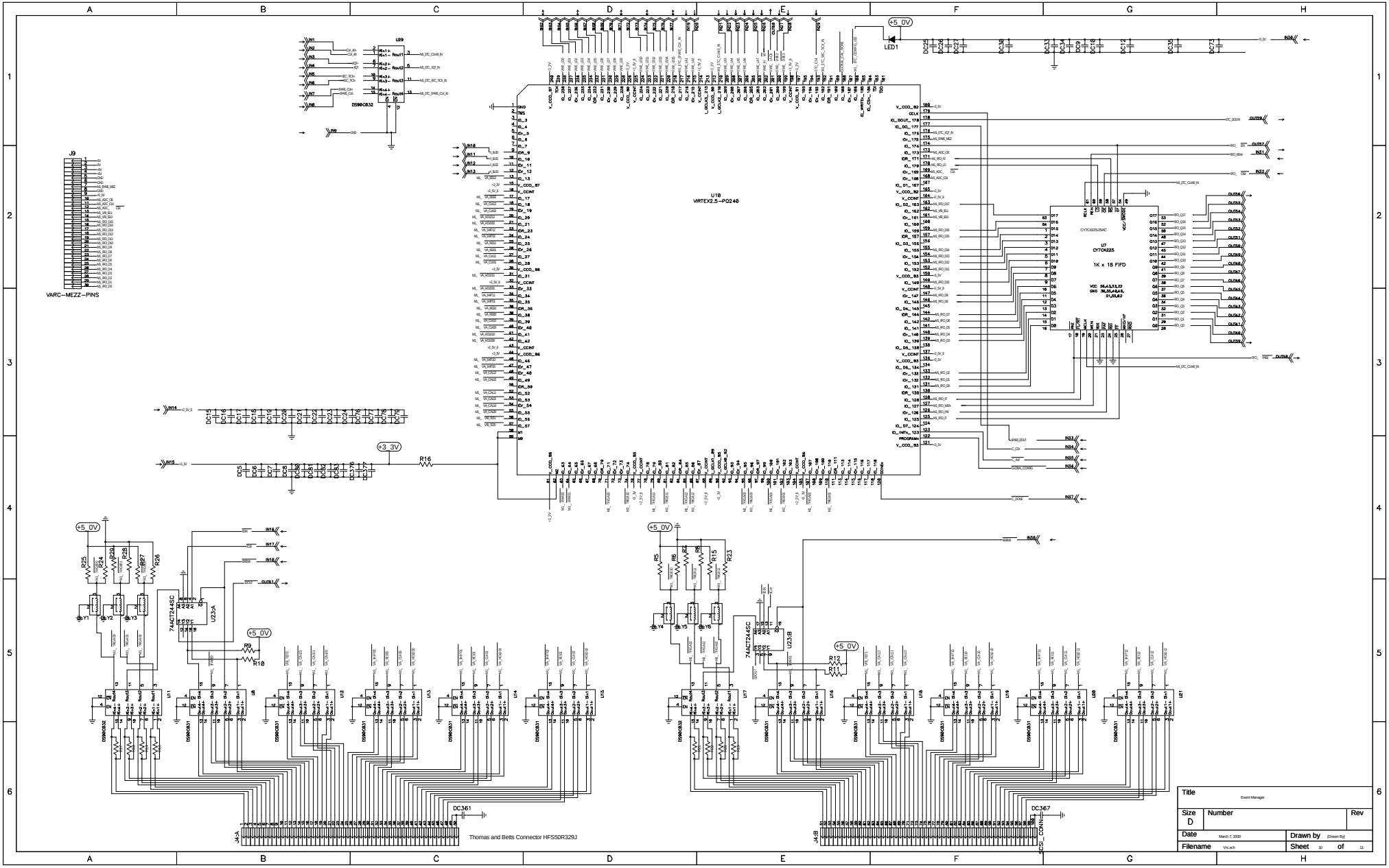

Title	Event Manager	
Size D	Number	Rev
Date	March 7, 2000	Drawn by (Drawn By)
Filename	Vrc.sch	Sheet 10 of 11

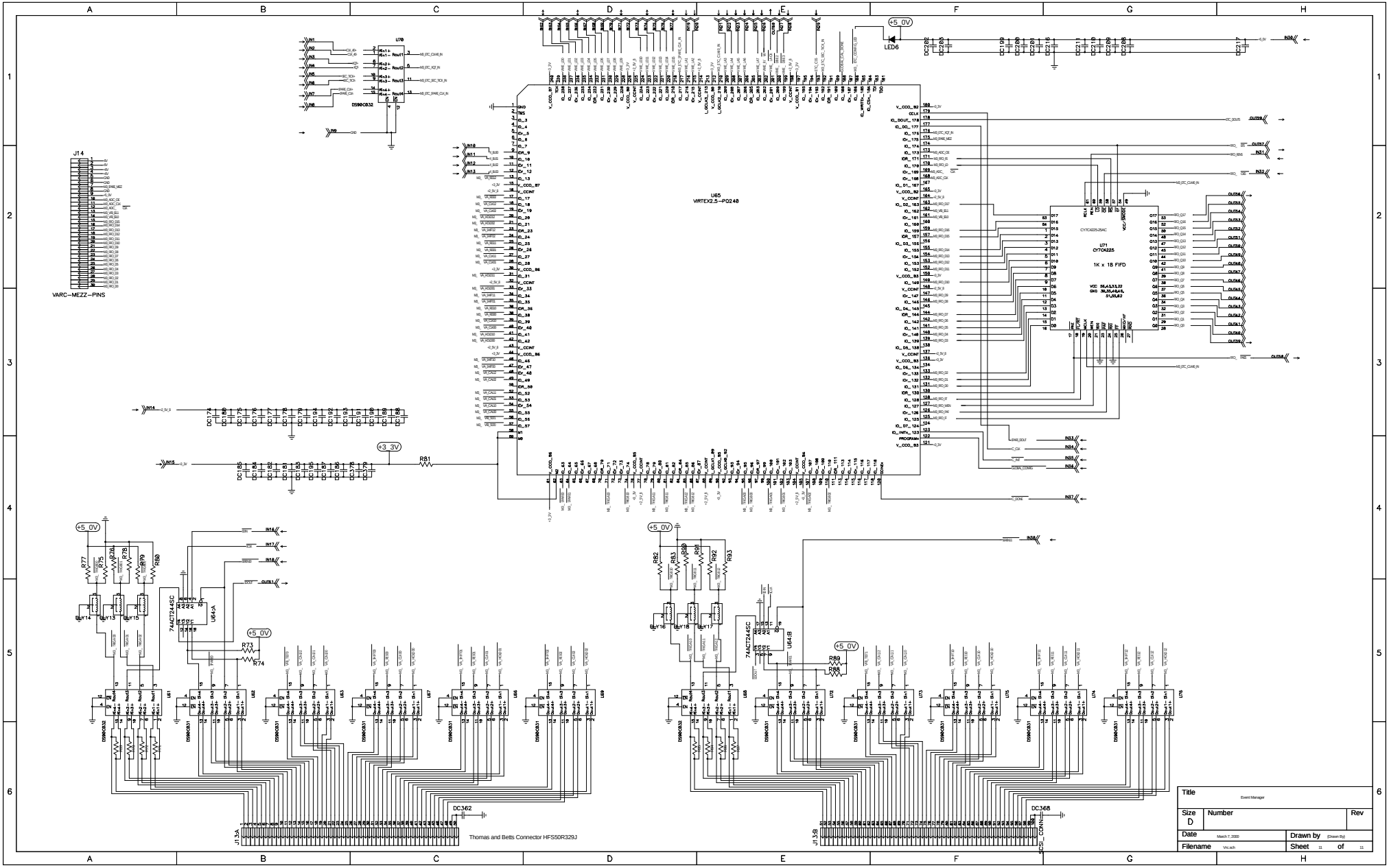

Title	Event Manager	
Size D	Number	Rev
Date	March 7, 2000	Drawn by (Drawn By)
Filename	Vrc.sch	Sheet 11 of 11

Harvard University
High Energy Physics Lab
MINOS VARC V1
March, 2000
NF/SH/JO/JO

Board No. [redacted]

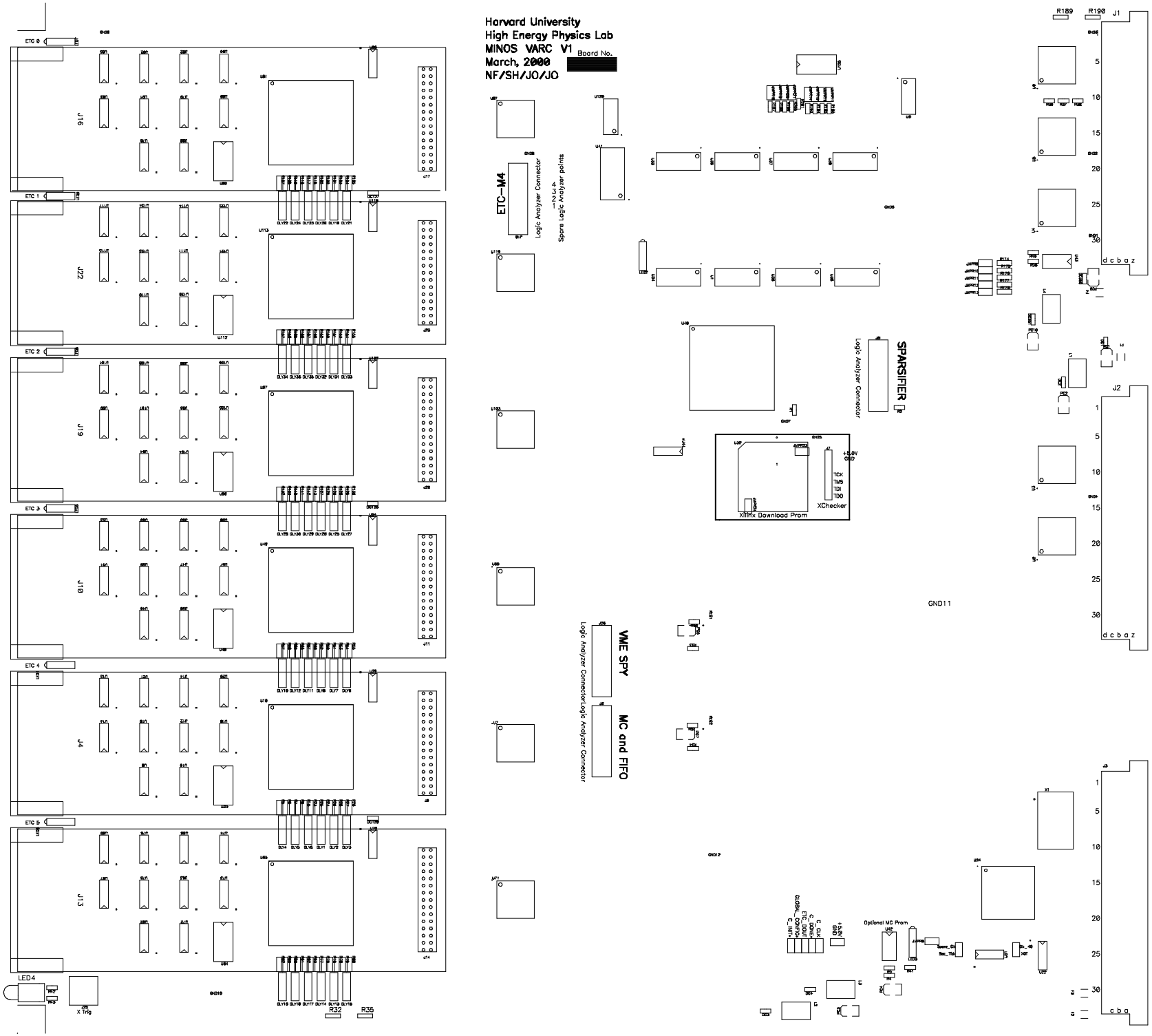

NATE
sarah

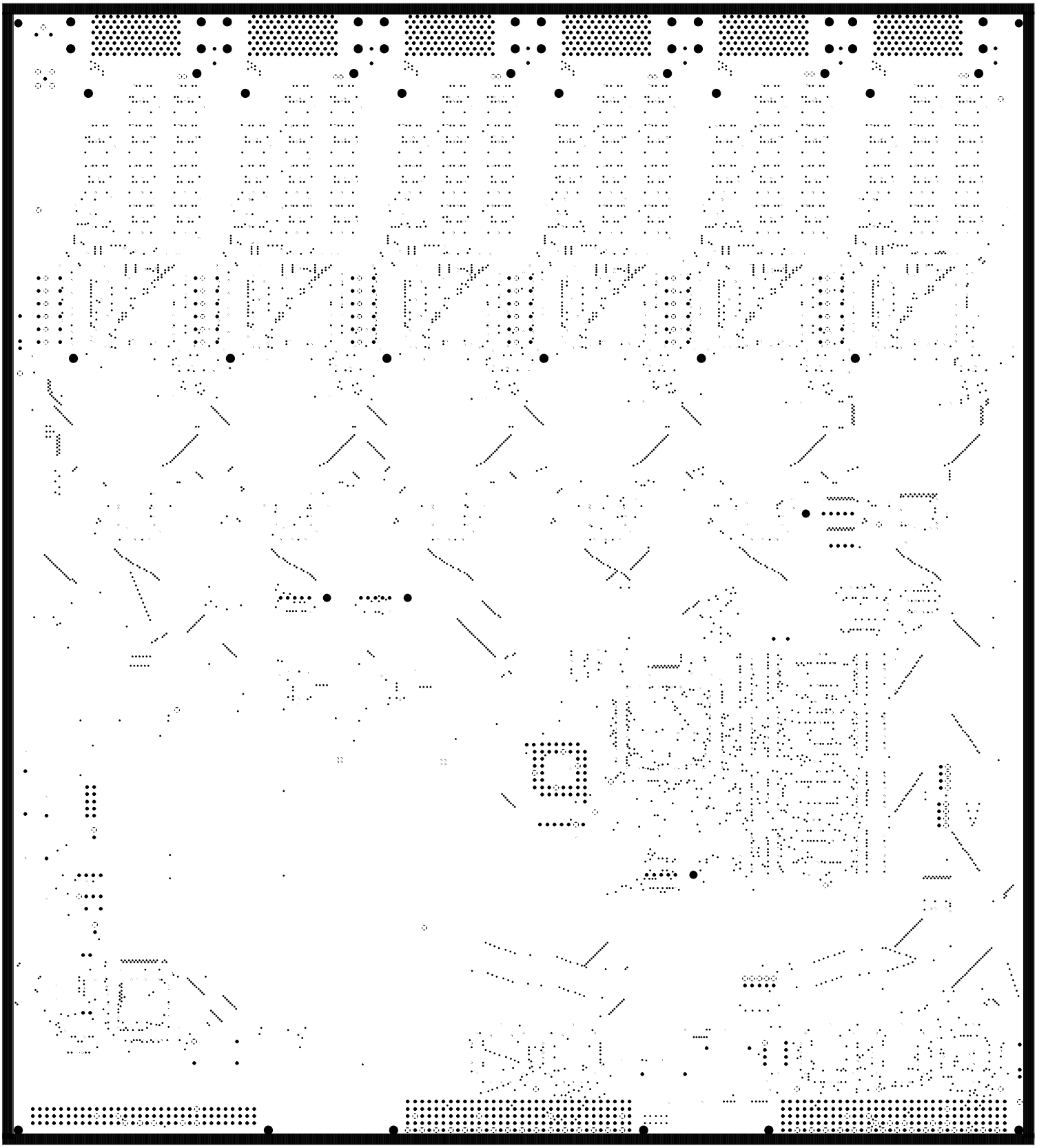

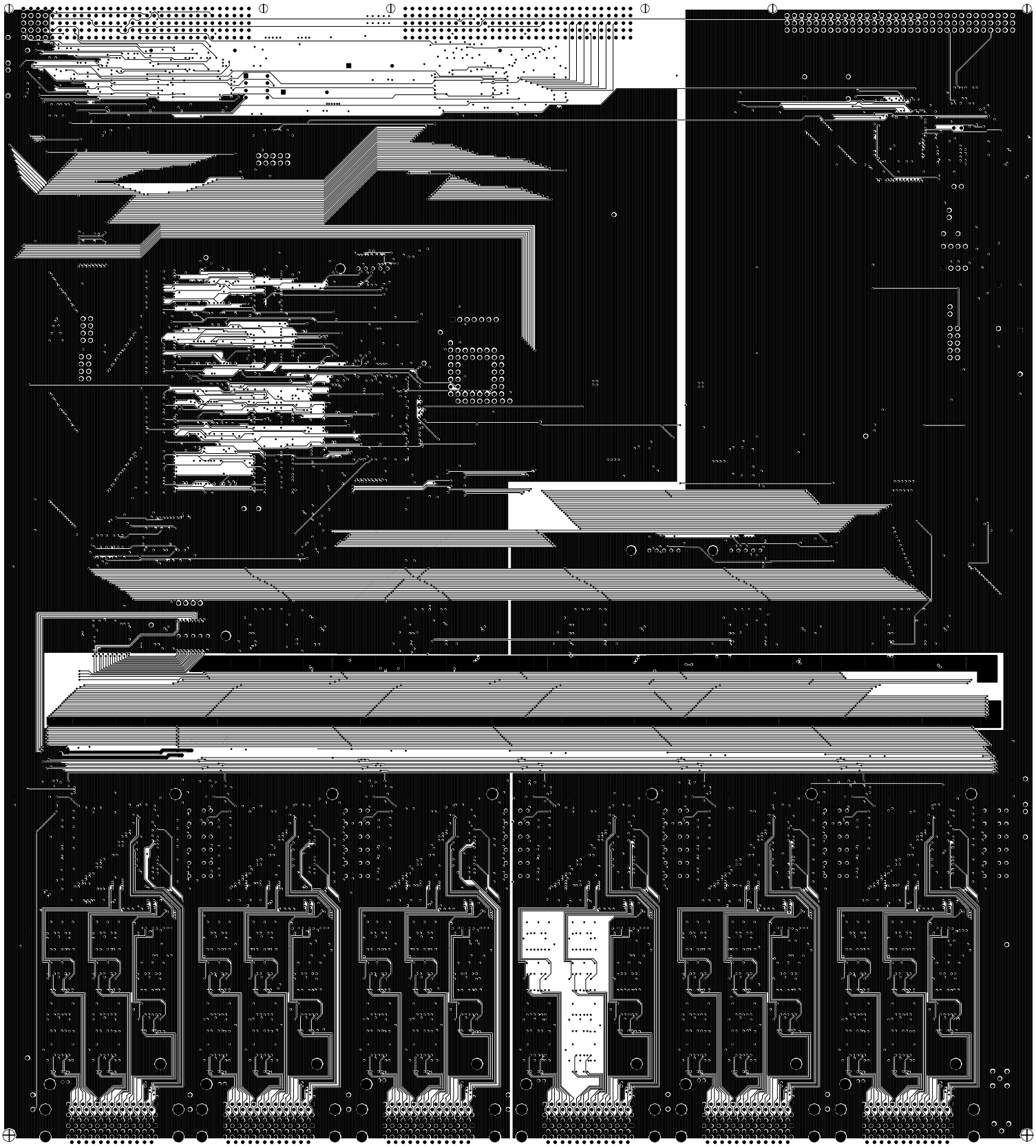

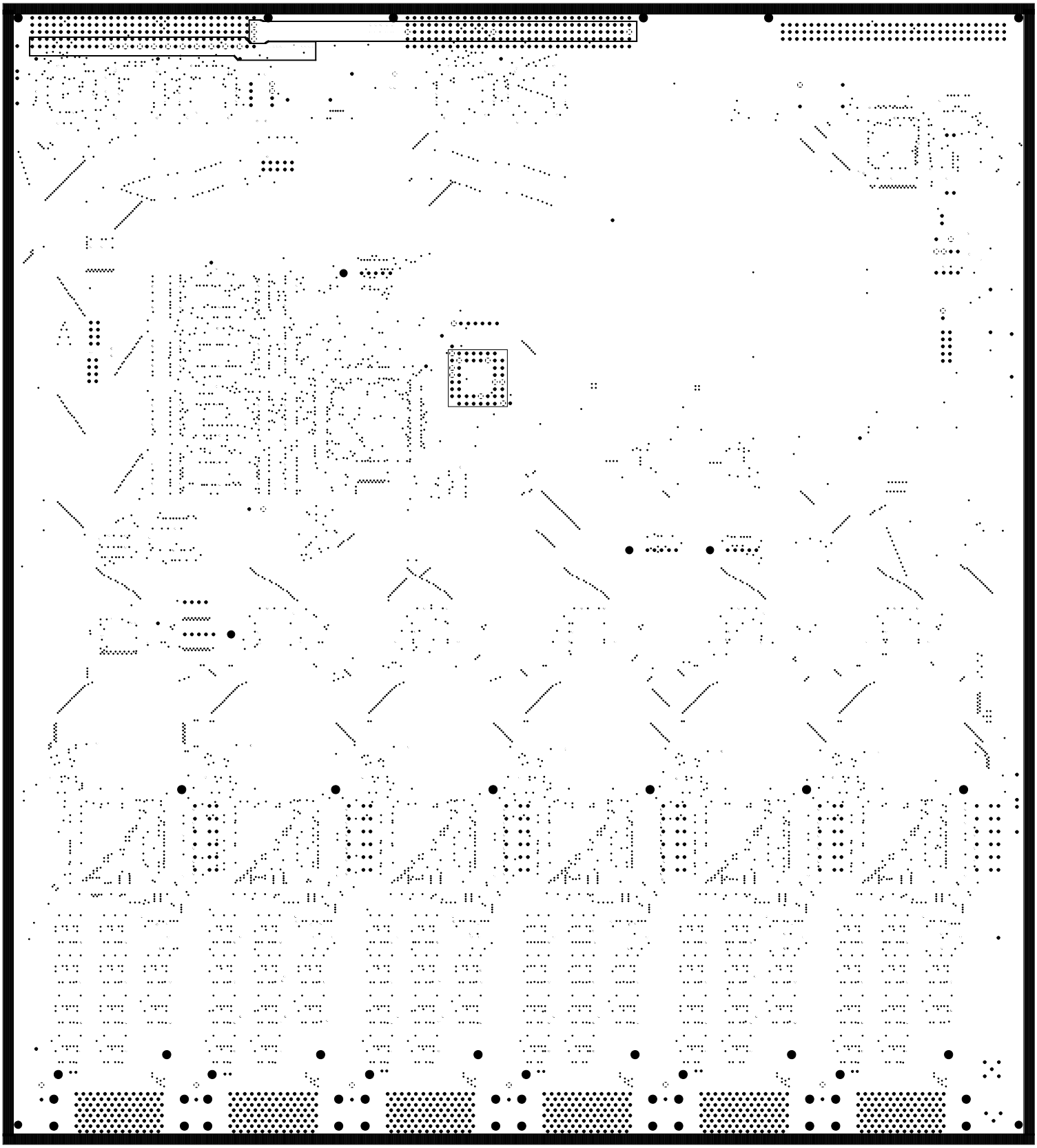

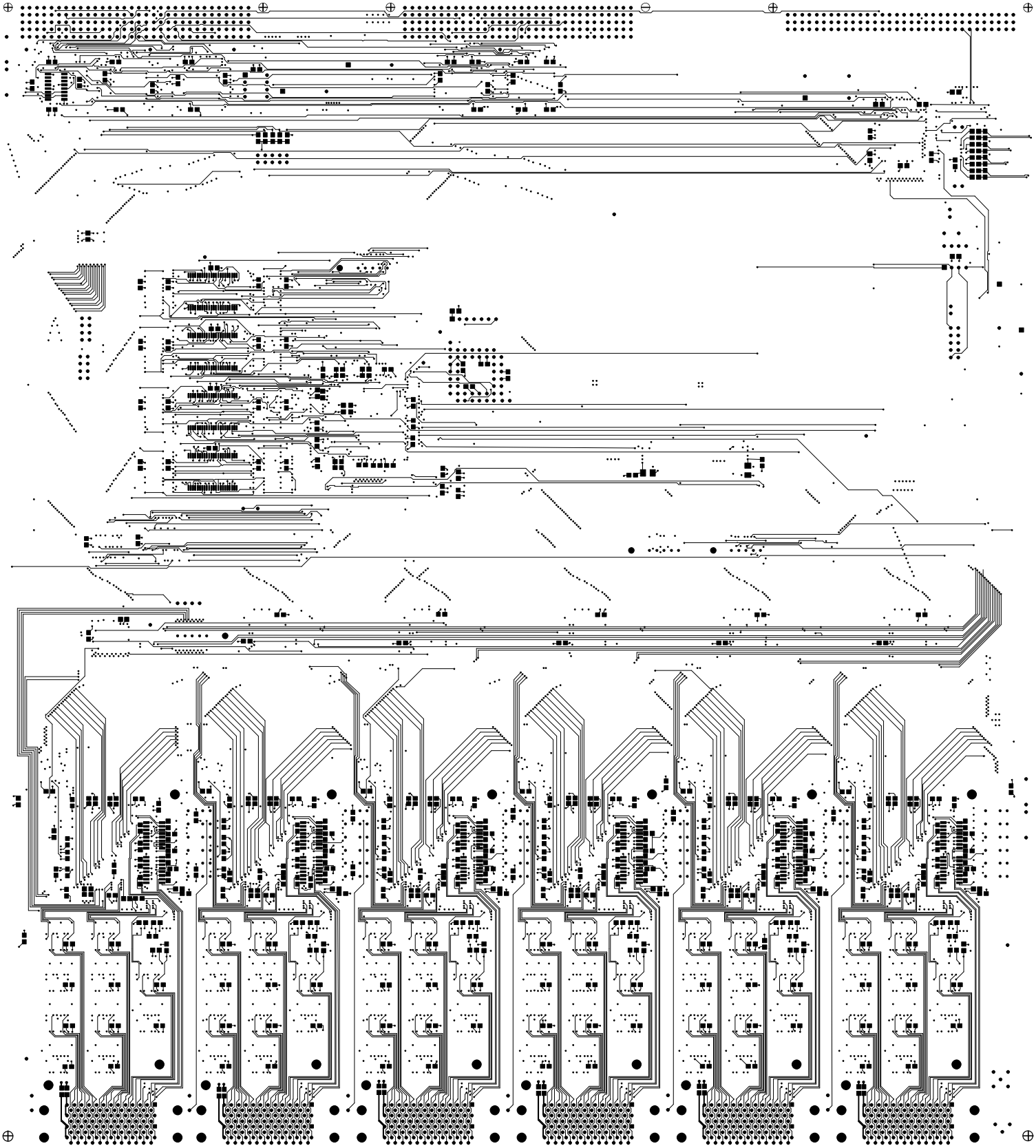

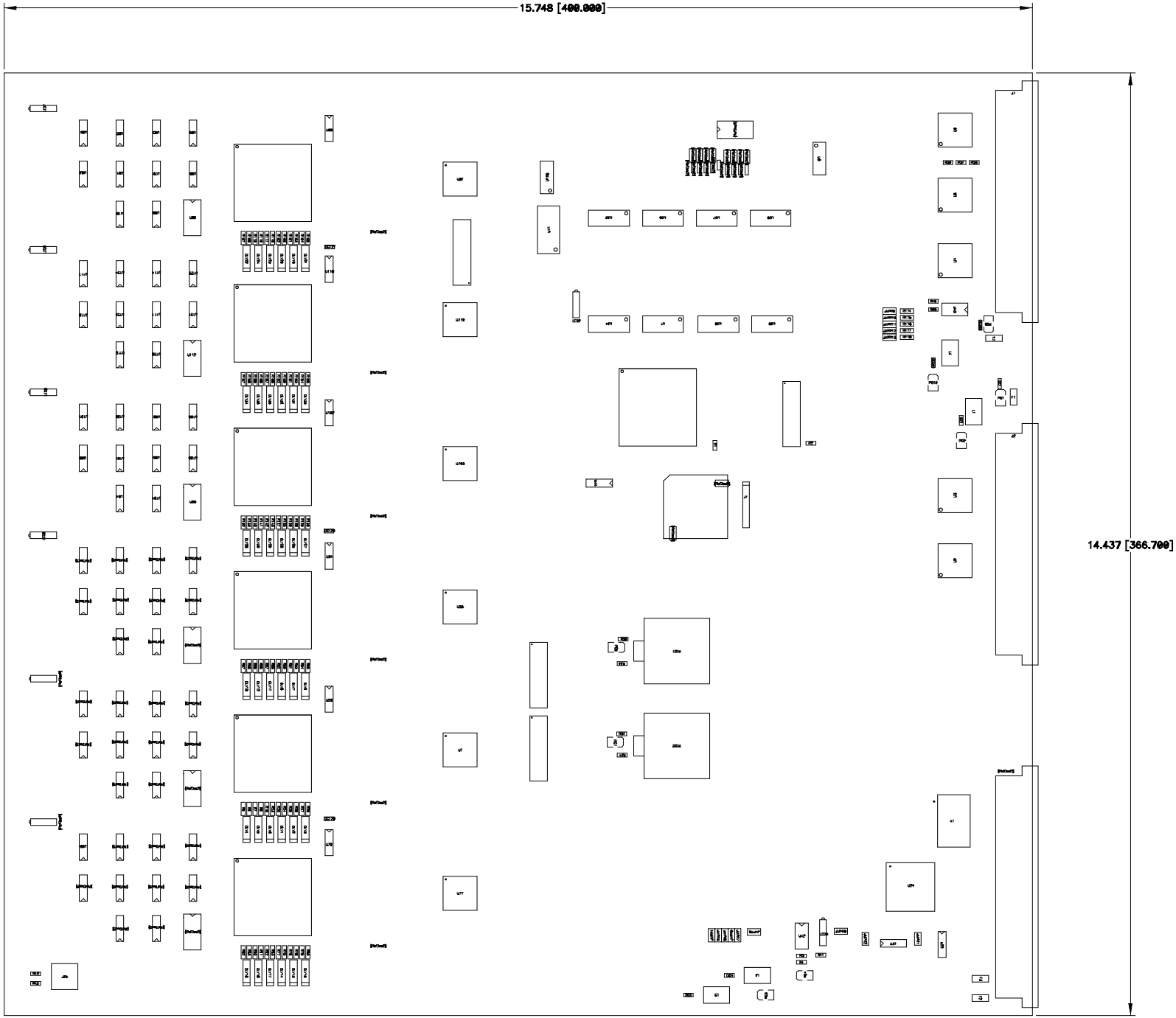

Drill Symbol Table		
Hole Dia (inch)	Symbol	Quantity
0.013		5840
0.017		20
0.018		12
0.032		128
0.034		608
0.038		583
0.094		4
0.100		2
0.109		24
0.110		24

Finished board thickness 0.093" +/- 0.008".
Mill solder side of board along top and bottom edges.
Mill width is 0.095" +0.000" -0.005 in from edges.
Finished board thickness of milled area 0.063" +/-0.005"

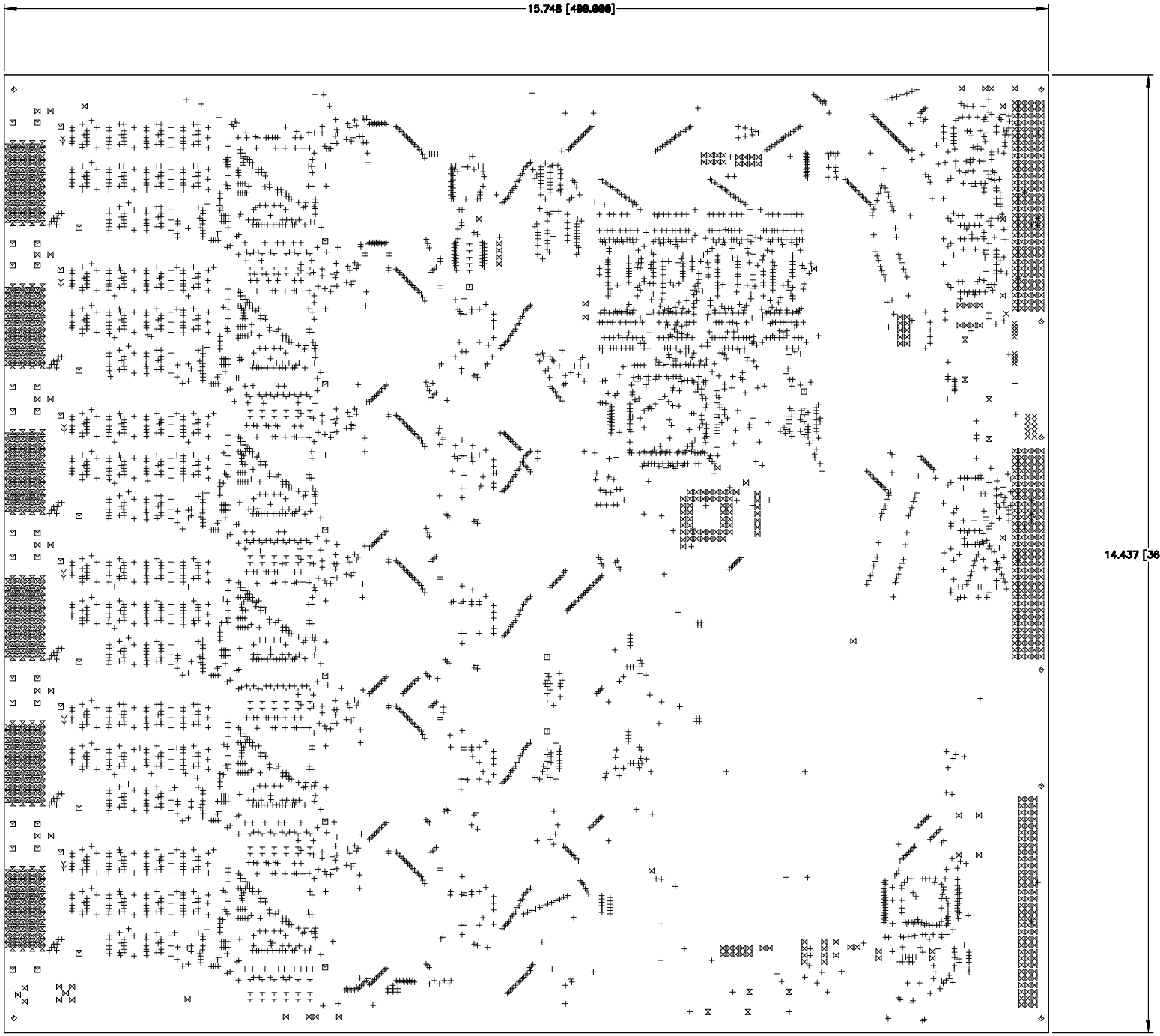

Drill Symbol Table		
Hole Dia (inch)	Symbol	Quantity
0.013		5840
0.017		26
0.018		12
0.032		128
0.034		608
0.038		583
0.094		4
0.100		2
0.109		24
0.110		24

Finished board thickness 0.093" +/- 0.008".
Mill solder side of board along top and bottom edges.
Mill width is 0.098" +0.000" -0.005 in from edges.
Finished board thickness of milled area 0.063" +/-0.005"

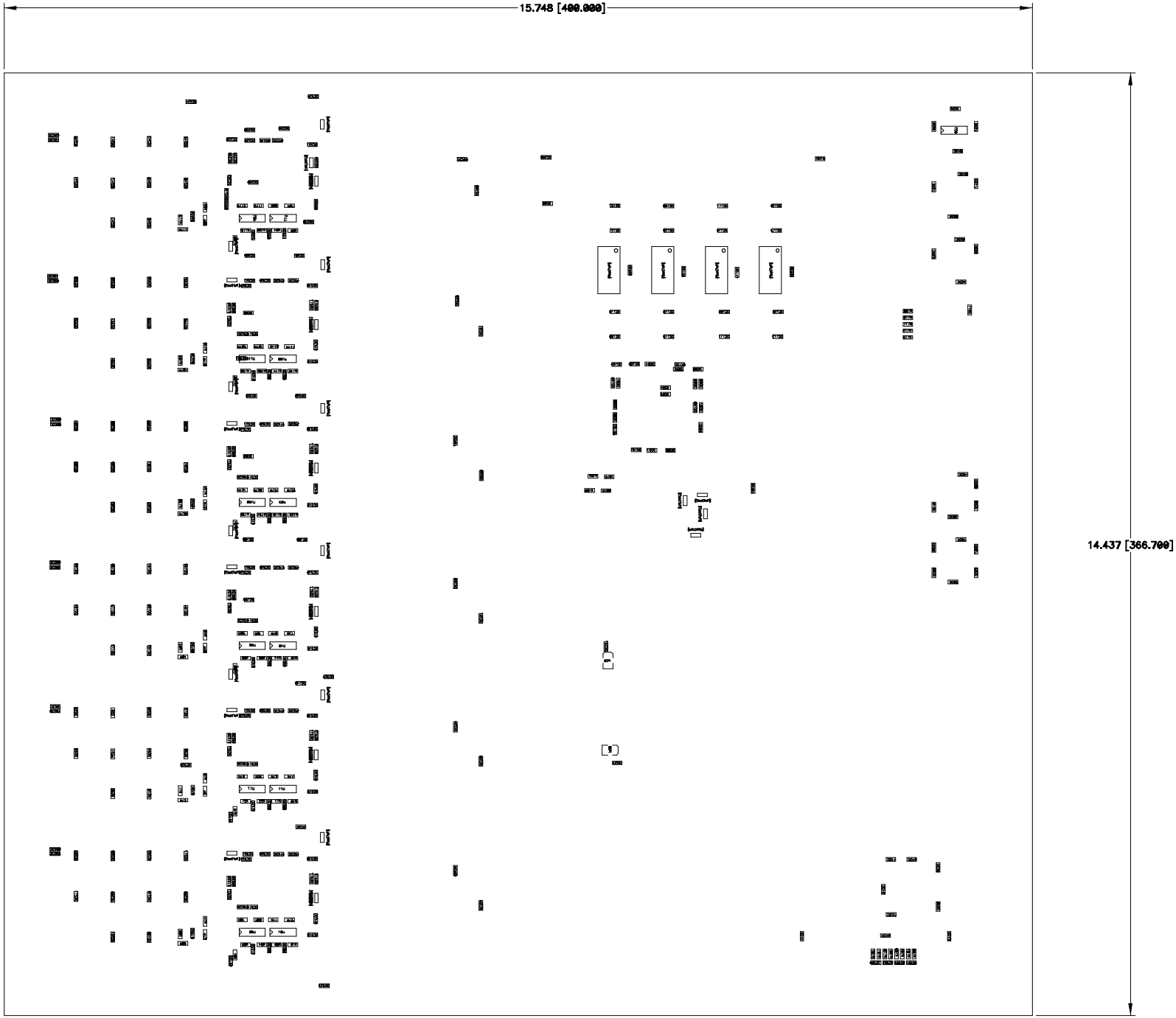

Drill Symbol Table		
Hole Dia (inch)	Symbol	Quantity
0.013		5840
0.017		28
0.018		12
0.032		128
0.034		608
0.038		583
0.094		4
0.100		2
0.109		24
0.110		24

Finished board thickness 0.093" +/- 0.008".
Mill solder side of board along top and bottom edges.
Mill width is 0.098" +0.000" -0.008 in from edges.
Finished board thickness of milled area 0.063" +/-0.008"

RefDes	Type	Value	Part Number	Mfg/Vendor
DC1	CAP-805	0.1uF	0805B104K500NX	Garrett
DC2	CAP-805	0.1uF	0805B104K500NX	
DC3	CAP-805	0.1uF	0805B104K500NX	
DC4	CAP-805	0.1uF	0805B104K500NX	
DC5	CAP-805	0.1uF	0805B104K500NX	
DC6	CAP-805	0.1uF	0805B104K500NX	
DC7	CAP-805	0.1uF	0805B104K500NX	
DC8	CAP-805	0.1uF	0805B104K500NX	
DC9	CAP-805	0.1uF	0805B104K500NX	
DC10	CAP-805	0.1uF	0805B104K500NX	
DC12	CAP-805	0.1uF	0805B104K500NX	
DC15	CAP-805	0.1uF	0805B104K500NX	
DC16	CAP-805	0.1uF	0805B104K500NX	
DC17	CAP-805	0.1uF	0805B104K500NX	
DC18	CAP-805	0.1uF	0805B104K500NX	
DC19	CAP-805	0.1uF	0805B104K500NX	
DC20	CAP-805	0.1uF	0805B104K500NX	
DC21	CAP-805	0.1uF	0805B104K500NX	
DC22	CAP-805	0.1uF	0805B104K500NX	
DC23	CAP-805	0.1uF	0805B104K500NX	
DC24	CAP-805	0.1uF	0805B104K500NX	
DC25	CAP-805	0.1uF	0805B104K500NX	
DC26	CAP-805	0.1uF	0805B104K500NX	
DC27	CAP-805	0.1uF	0805B104K500NX	
DC30	CAP-805	0.1uF	0805B104K500NX	
DC33	CAP-805	0.1uF	0805B104K500NX	
DC34	CAP-805	0.1uF	0805B104K500NX	
DC35	CAP-805	0.1uF	0805B104K500NX	
DC37	CAP-805	0.1uF	0805B104K500NX	
DC38	CAP-805	0.1uF	0805B104K500NX	
DC39	CAP-805	0.1uF	0805B104K500NX	
DC40	CAP-805	0.1uF	0805B104K500NX	
DC41	CAP-805	0.1uF	0805B104K500NX	
DC42	CAP-805	0.1uF	0805B104K500NX	
DC43	CAP-805	0.1uF	0805B104K500NX	
DC44	CAP-805	0.1uF	0805B104K500NX	
DC45	CAP-805	0.1uF	0805B104K500NX	
DC46	CAP-805	0.1uF	0805B104K500NX	
DC47	CAP-805	0.1uF	0805B104K500NX	
DC48	CAP-805	0.1uF	0805B104K500NX	
DC49	CAP-805	0.1uF	0805B104K500NX	
DC50	CAP-805	0.1uF	0805B104K500NX	
DC51	CAP-805	0.1uF	0805B104K500NX	
DC52	CAP-805	0.1uF	0805B104K500NX	
DC53	CAP-805	0.1uF	0805B104K500NX	
DC54	CAP-805	0.1uF	0805B104K500NX	
DC55	CAP-805	0.1uF	0805B104K500NX	
DC56	CAP-805	0.1uF	0805B104K500NX	
DC57	CAP-805	0.1uF	0805B104K500NX	
DC58	CAP-805	0.1uF	0805B104K500NX	
DC59	CAP-805	0.1uF	0805B104K500NX	
DC60	CAP-805	0.1uF	0805B104K500NX	
DC61	CAP-805	0.1uF	0805B104K500NX	
DC62	CAP-805	0.1uF	0805B104K500NX	
DC63	CAP-805	0.1uF	0805B104K500NX	
DC64	CAP-805	0.1uF	0805B104K500NX	
DC65	CAP-805	0.1uF	0805B104K500NX	
DC66	CAP-805	0.1uF	0805B104K500NX	

DC67	CAP-805	0.1uF	0805B104K500NX	
DC68	CAP-805	0.1uF	0805B104K500NX	
DC69	CAP-805	0.1uF	0805B104K500NX	
DC70	CAP-805	0.1uF	0805B104K500NX	
DC71	CAP-805	0.1uF	0805B104K500NX	
DC72	CAP-805	0.1uF	0805B104K500NX	
DC73	CAP-805	0.1uF	0805B104K500NX	
DC74	CAP-805	0.1uF	0805B104K500NX	
DC75	CAP-805	0.1uF	0805B104K500NX	
DC76	CAP-805	0.1uF	0805B104K500NX	
DC77	CAP-805	0.1uF	0805B104K500NX	
DC78	CAP-805	0.1uF	0805B104K500NX	
DC79	CAP-805	0.1uF	0805B104K500NX	
DC80	CAP-805	0.1uF	0805B104K500NX	
DC81	CAP-805	0.1uF	0805B104K500NX	
DC82	CAP-805	0.1uF	0805B104K500NX	
DC83	CAP-805	0.1uF	0805B104K500NX	
DC84	CAP-805	0.1uF	0805B104K500NX	
DC85	CAP-805	0.1uF	0805B104K500NX	
DC86	CAP-805	0.1uF	0805B104K500NX	
DC87	CAP-805	0.1uF	0805B104K500NX	
DC88	CAP-805	0.1uF	0805B104K500NX	
DC89	CAP-805	0.1uF	0805B104K500NX	
DC90	CAP-805	0.1uF	0805B104K500NX	
DC91	CAP-805	0.1uF	0805B104K500NX	
DC92	CAP-805	0.1uF	0805B104K500NX	
DC93	CAP-805	0.1uF	0805B104K500NX	
DC94	CAP-805	0.1uF	0805B104K500NX	
DC95	CAP-805	0.1uF	0805B104K500NX	
DC96	CAP-805	0.1uF	0805B104K500NX	
DC97	CAP-805	0.1uF	0805B104K500NX	
DC98	CAP-805	0.1uF	0805B104K500NX	
DC99	CAP-805	0.1uF	0805B104K500NX	
DC100	CAP-805	0.1uF	0805B104K500NX	
DC101	CAP-805	0.1uF	0805B104K500NX	
DC102	CAP-805	0.1uF	0805B104K500NX	
DC103	CAP-805	0.1uF	0805B104K500NX	
DC104	CAP-805	0.1uF	0805B104K500NX	
DC105	CAP-805	0.1uF	0805B104K500NX	
DC106	CAP-805	0.1uF	0805B104K500NX	
DC107	CAP-805	0.1uF	0805B104K500NX	
DC108	CAP-805	0.1uF	0805B104K500NX	
DC109	CAP-805	0.1uF	0805B104K500NX	
DC110	CAP-805	0.1uF	0805B104K500NX	
DC111	CAP-805	0.1uF	0805B104K500NX	
DC112	CAP-805	0.1uF	0805B104K500NX	
DC113	CAP-805	0.1uF	0805B104K500NX	
DC114	CAP-805	0.1uF	0805B104K500NX	
DC115	CAP-805	0.1uF	0805B104K500NX	
DC116	CAP-805	0.1uF	0805B104K500NX	
DC117	CAP-805	0.1uF	0805B104K500NX	
DC118	CAP-805	0.1uF	0805B104K500NX	
DC119	CAP-805	0.1uF	0805B104K500NX	
DC120	CAP-805	0.1uF	0805B104K500NX	
DC121	CAP-805	0.1uF	0805B104K500NX	
DC122	CAP-805	0.1uF	0805B104K500NX	
DC123	CAP-805	0.1uF	0805B104K500NX	
DC124	CAP-805	0.1uF	0805B104K500NX	
DC125	CAP-805	0.1uF	0805B104K500NX	
DC126	CAP-805	0.1uF	0805B104K500NX	

DC127	CAP-805	0.1uF	0805B104K500NX	
DC128	CAP-805	0.1uF	0805B104K500NX	
DC129	CAP-805	0.1uF	0805B104K500NX	
DC130	CAP-805	0.1uF	0805B104K500NX	
DC131	CAP-805	0.1uF	0805B104K500NX	
DC132	CAP-805	0.1uF	0805B104K500NX	
DC133	CAP-805	0.1uF	0805B104K500NX	
DC134	CAP-805	0.1uF	0805B104K500NX	
DC135	CAP-805	0.1uF	0805B104K500NX	
DC136	CAP-805	0.1uF	0805B104K500NX	
DC137	CAP-805	0.1uF	0805B104K500NX	
DC138	CAP-805	0.1uF	0805B104K500NX	
DC139	CAP-805	0.1uF	0805B104K500NX	
DC140	CAP-805	0.1uF	0805B104K500NX	
DC141	CAP-805	0.1uF	0805B104K500NX	
DC142	CAP-805	0.1uF	0805B104K500NX	
DC143	CAP-805	0.1uF	0805B104K500NX	
DC144	CAP-805	0.1uF	0805B104K500NX	
DC145	CAP-805	0.1uF	0805B104K500NX	
DC146	CAP-805	0.1uF	0805B104K500NX	
DC147	CAP-805	0.1uF	0805B104K500NX	
DC148	CAP-805	0.1uF	0805B104K500NX	
DC149	CAP-805	0.1uF	0805B104K500NX	
DC150	CAP-805	0.1uF	0805B104K500NX	
DC151	CAP-805	0.1uF	0805B104K500NX	
DC152	CAP-805	0.1uF	0805B104K500NX	
DC153	CAP-805	0.1uF	0805B104K500NX	
DC154	CAP-805	0.1uF	0805B104K500NX	
DC155	CAP-805	0.1uF	0805B104K500NX	
DC156	CAP-805	0.1uF	0805B104K500NX	
DC157	CAP-805	0.1uF	0805B104K500NX	
DC158	CAP-805	0.1uF	0805B104K500NX	
DC160	CAP-805	0.1uF	0805B104K500NX	
DC162	CAP-805	0.1uF	0805B104K500NX	
DC164	CAP-805	0.1uF	0805B104K500NX	
DC165	CAP-805	0.1uF	0805B104K500NX	
DC168	CAP-805	0.1uF	0805B104K500NX	
DC172	CAP-805	0.1uF	0805B104K500NX	
DC173	CAP-805	0.1uF	0805B104K500NX	
DC174	CAP-805	0.1uF	0805B104K500NX	
DC175	CAP-805	0.1uF	0805B104K500NX	
DC176	CAP-805	0.1uF	0805B104K500NX	
DC177	CAP-805	0.1uF	0805B104K500NX	
DC178	CAP-805	0.1uF	0805B104K500NX	
DC179	CAP-805	0.1uF	0805B104K500NX	
DC180	CAP-805	0.1uF	0805B104K500NX	
DC181	CAP-805	0.1uF	0805B104K500NX	
DC182	CAP-805	0.1uF	0805B104K500NX	
DC183	CAP-805	0.1uF	0805B104K500NX	
DC184	CAP-805	0.1uF	0805B104K500NX	
DC185	CAP-805	0.1uF	0805B104K500NX	
DC186	CAP-805	0.1uF	0805B104K500NX	
DC187	CAP-805	0.1uF	0805B104K500NX	
DC188	CAP-805	0.1uF	0805B104K500NX	
DC189	CAP-805	0.1uF	0805B104K500NX	
DC190	CAP-805	0.1uF	0805B104K500NX	
DC191	CAP-805	0.1uF	0805B104K500NX	
DC192	CAP-805	0.1uF	0805B104K500NX	
DC193	CAP-805	0.1uF	0805B104K500NX	
DC194	CAP-805	0.1uF	0805B104K500NX	

DC195	CAP-805	0.1uF	0805B104K500NX	
DC199	CAP-805	0.1uF	0805B104K500NX	
DC200	CAP-805	0.1uF	0805B104K500NX	
DC201	CAP-805	0.1uF	0805B104K500NX	
DC202	CAP-805	0.1uF	0805B104K500NX	
DC203	CAP-805	0.1uF	0805B104K500NX	
DC208	CAP-805	0.1uF	0805B104K500NX	
DC209	CAP-805	0.1uF	0805B104K500NX	
DC210	CAP-805	0.1uF	0805B104K500NX	
DC211	CAP-805	0.1uF	0805B104K500NX	
DC216	CAP-805	0.1uF	0805B104K500NX	
DC217	CAP-805	0.1uF	0805B104K500NX	
DC218	CAP-805	0.1uF	0805B104K500NX	
DC219	CAP-805	0.1uF	0805B104K500NX	
DC220	CAP-805	0.1uF	0805B104K500NX	
DC221	CAP-805	0.1uF	0805B104K500NX	
DC222	CAP-805	0.1uF	0805B104K500NX	
DC223	CAP-805	0.1uF	0805B104K500NX	
DC224	CAP-805	0.1uF	0805B104K500NX	
DC225	CAP-805	0.1uF	0805B104K500NX	
DC226	CAP-805	0.1uF	0805B104K500NX	
DC227	CAP-805	0.1uF	0805B104K500NX	
DC228	CAP-805	0.1uF	0805B104K500NX	
DC229	CAP-805	0.1uF	0805B104K500NX	
DC230	CAP-805	0.1uF	0805B104K500NX	
DC231	CAP-805	0.1uF	0805B104K500NX	
DC232	CAP-805	0.1uF	0805B104K500NX	
DC233	CAP-805	0.1uF	0805B104K500NX	
DC234	CAP-805	0.1uF	0805B104K500NX	
DC235	CAP-805	0.1uF	0805B104K500NX	
DC236	CAP-805	0.1uF	0805B104K500NX	
DC237	CAP-805	0.1uF	0805B104K500NX	
DC238	CAP-805	0.1uF	0805B104K500NX	
DC239	CAP-805	0.1uF	0805B104K500NX	
DC240	CAP-805	0.1uF	0805B104K500NX	
DC241	CAP-805	0.1uF	0805B104K500NX	
DC242	CAP-805	0.1uF	0805B104K500NX	
DC243	CAP-805	0.1uF	0805B104K500NX	
DC244	CAP-805	0.1uF	0805B104K500NX	
DC245	CAP-805	0.1uF	0805B104K500NX	
DC246	CAP-805	0.1uF	0805B104K500NX	
DC247	CAP-805	0.1uF	0805B104K500NX	
DC248	CAP-805	0.1uF	0805B104K500NX	
DC249	CAP-805	0.1uF	0805B104K500NX	
DC250	CAP-805	0.1uF	0805B104K500NX	
DC251	CAP-805	0.1uF	0805B104K500NX	
DC252	CAP-805	0.1uF	0805B104K500NX	
DC253	CAP-805	0.1uF	0805B104K500NX	
DC254	CAP-805	0.1uF	0805B104K500NX	
DC255	CAP-805	0.1uF	0805B104K500NX	
DC256	CAP-805	0.1uF	0805B104K500NX	
DC257	CAP-805	0.1uF	0805B104K500NX	
DC258	CAP-805	0.1uF	0805B104K500NX	
DC259	CAP-805	0.1uF	0805B104K500NX	
DC260	CAP-805	0.1uF	0805B104K500NX	
DC261	CAP-805	0.1uF	0805B104K500NX	
DC262	CAP-805	0.1uF	0805B104K500NX	
DC263	CAP-805	0.1uF	0805B104K500NX	
DC264	CAP-805	0.1uF	0805B104K500NX	
DC265	CAP-805	0.1uF	0805B104K500NX	

DC266	CAP-805	0.1uF	0805B104K500NX	
DC267	CAP-805	0.1uF	0805B104K500NX	
DC268	CAP-805	0.1uF	0805B104K500NX	
DC269	CAP-805	0.1uF	0805B104K500NX	
DC270	CAP-805	0.1uF	0805B104K500NX	
DC271	CAP-805	0.1uF	0805B104K500NX	
DC272	CAP-805	0.1uF	0805B104K500NX	
DC273	CAP-805	0.1uF	0805B104K500NX	
DC274	CAP-805	0.1uF	0805B104K500NX	
DC275	CAP-805	0.1uF	0805B104K500NX	
DC276	CAP-805	0.1uF	0805B104K500NX	
DC277	CAP-805	0.1uF	0805B104K500NX	
DC278	CAP-805	0.1uF	0805B104K500NX	
DC279	CAP-805	0.1uF	0805B104K500NX	
DC280	CAP-805	0.1uF	0805B104K500NX	
DC281	CAP-805	0.1uF	0805B104K500NX	
DC282	CAP-805	0.1uF	0805B104K500NX	
DC283	CAP-805	0.1uF	0805B104K500NX	
DC284	CAP-805	0.1uF	0805B104K500NX	
DC285	CAP-805	0.1uF	0805B104K500NX	
DC286	CAP-805	0.1uF	0805B104K500NX	
DC287	CAP-805	0.1uF	0805B104K500NX	
DC288	CAP-805	0.1uF	0805B104K500NX	
DC289	CAP-805	0.1uF	0805B104K500NX	
DC290	CAP-805	0.1uF	0805B104K500NX	
DC291	CAP-805	0.1uF	0805B104K500NX	
DC292	CAP-805	0.1uF	0805B104K500NX	
DC293	CAP-805	0.1uF	0805B104K500NX	
DC294	CAP-805	0.1uF	0805B104K500NX	
DC295	CAP-805	0.1uF	0805B104K500NX	
DC296	CAP-805	0.1uF	0805B104K500NX	
DC297	CAP-805	0.1uF	0805B104K500NX	
DC298	CAP-805	0.1uF	0805B104K500NX	
DC299	CAP-805	0.1uF	0805B104K500NX	
DC306	CAP-805	0.1uF	0805B104K500NX	
DC307	CAP-805	0.1uF	0805B104K500NX	
DC308	CAP-805	0.1uF	0805B104K500NX	
DC309	CAP-805	0.1uF	0805B104K500NX	
DC310	CAP-805	0.1uF	0805B104K500NX	
DC311	CAP-805	0.1uF	0805B104K500NX	
DC312	CAP-805	0.1uF	0805B104K500NX	
DC313	CAP-805	0.1uF	0805B104K500NX	
DC314	CAP-805	0.1uF	0805B104K500NX	
DC315	CAP-805	0.1uF	0805B104K500NX	
DC316	CAP-805	0.1uF	0805B104K500NX	
DC317	CAP-805	0.1uF	0805B104K500NX	
DC318	CAP-805	0.1uF	0805B104K500NX	
DC319	CAP-805	0.1uF	0805B104K500NX	
DC320	CAP-805	0.1uF	0805B104K500NX	
DC321	CAP-805	0.1uF	0805B104K500NX	
DC322	CAP-805	0.1uF	0805B104K500NX	
DC323	CAP-805	0.1uF	0805B104K500NX	
DC324	CAP-805	0.1uF	0805B104K500NX	
DC325	CAP-805	0.1uF	0805B104K500NX	
DC326	CAP-805	0.1uF	0805B104K500NX	
DC327	CAP-805	0.1uF	0805B104K500NX	
DC328	CAP-805	0.1uF	0805B104K500NX	
DC329	CAP-805	0.1uF	0805B104K500NX	
DC330	CAP-805	0.1uF	0805B104K500NX	
DC331	CAP-805	0.1uF	0805B104K500NX	

DC332	CAP-805	0.1uF	0805B104K500NX	
DC333	CAP-805	0.1uF	0805B104K500NX	
DC334	CAP-805	0.1uF	0805B104K500NX	
DC335	CAP-805	0.1uF	0805B104K500NX	
DC336	CAP-805	0.1uF	0805B104K500NX	
DC337	CAP-805	0.1uF	0805B104K500NX	
DC338	CAP-805	0.1uF	0805B104K500NX	
DC350	CAP-805	0.1uF	0805B104K500NX	
DC351	CAP-805	0.1uF	0805B104K500NX	
DC352	CAP-805	0.1uF	0805B104K500NX	
DC353	CAP-805	0.1uF	0805B104K500NX	
DC354	CAP-805	0.1uF	0805B104K500NX	
DC355	CAP-805	0.1uF	0805B104K500NX	
DC356	CAP-805	0.1uF	0805B104K500NX	
DC357	CAP-805	0.1uF	0805B104K500NX	
DC358	CAP-805	0.1uF	0805B104K500NX	
DC359	CAP-805	0.1uF	0805B104K500NX	
DC360	CAP-805	0.1uF	0805B104K500NX	
DC361	CAP-805	0.1uF	0805B104K500NX	
DC362	CAP-805	0.1uF	0805B104K500NX	
DC363	CAP-805	0.1uF	0805B104K500NX	
DC364	CAP-805	0.1uF	0805B104K500NX	
DC365	CAP-805	0.1uF	0805B104K500NX	
DC366	CAP-805	0.1uF	0805B104K500NX	
DC367	CAP-805	0.1uF	0805B104K500NX	
DC368	CAP-805	0.1uF	0805B104K500NX	
DC369	CAP-805	0.1uF	0805B104K500NX	
DC370	CAP-805	0.1uF	0805B104K500NX	
DC371	CAP-805	0.1uF	0805B104K500NX	
DC372	CAP-805	0.1uF	0805B104K500NX	
DC373	CAP-805	0.1uF	0805B104K500NX	
DC374	CAP-805	0.1uF	0805B104K500NX	
DC375	CAP-805	0.1uF	0805B104K500NX	
DC376	CAP-805	0.1uF	0805B104K500NX	
DC377	CAP-805	0.1uF	0805B104K500NX	
DC378	CAP-805	0.1uF	0805B104K500NX	
DC379	CAP-805	0.1uF	0805B104K500NX	
DC380	CAP-805	0.1uF	0805B104K500NX	
DC381	CAP-805	0.1uF	0805B104K500NX	
DC382	CAP-805	0.1uF	0805B104K500NX	
DC383	CAP-805	0.1uF	0805B104K500NX	
DC384	CAP-805	0.1uF	0805B104K500NX	
DC385	CAP-805	0.1uF	0805B104K500NX	
DC386	CAP-805	0.1uF	0805B104K500NX	
DC387	CAP-805	0.1uF	0805B104K500NX	
DLY1	BEL_DELAY			Bel
DLY2	BEL_DELAY			
DLY3	BEL_DELAY			
DLY4	BEL_DELAY			
DLY5	BEL_DELAY			
DLY6	BEL_DELAY			
DLY7	BEL_DELAY			
DLY8	BEL_DELAY			
DLY9	BEL_DELAY			
DLY10	BEL_DELAY			
DLY11	BEL_DELAY			
DLY12	BEL_DELAY			
DLY13	BEL_DELAY			
DLY14	BEL_DELAY			

DLY15	BEL_DELAY			
DLY16	BEL_DELAY			
DLY17	BEL_DELAY			
DLY18	BEL_DELAY			
DLY19	BEL_DELAY			
DLY20	BEL_DELAY			
DLY21	BEL_DELAY			
DLY22	BEL_DELAY			
DLY23	BEL_DELAY			
DLY24	BEL_DELAY			
DLY25	BEL_DELAY			
DLY26	BEL_DELAY			
DLY27	BEL_DELAY			
DLY28	BEL_DELAY			
DLY29	BEL_DELAY			
DLY30	BEL_DELAY			
DLY31	BEL_DELAY			
DLY32	BEL_DELAY			
DLY33	BEL_DELAY			
DLY34	BEL_DELAY			
DLY35	BEL_DELAY			
DLY36	BEL_DELAY			
F1	FUSE-SM	5 Amp		
F2	FUSE-SM	5 Amp		
F3	FUSE-SM	5 Amp		
F4	FUSE-SM	5 Amp		
J1	VME160P1	160 Pin VME	02.01.160.2101	Harting
J2	VME160P2	160 Pin VME		
J3	VME96-J1	96 Pin VME	650947-5	
J4	SCSI_CONN	100 pin Dual		Thomas and Betts
J6	LOGIC-ANALYZER	38 pin surface mount	AMP Inc.	
J7	JTAG			
J8	LOGIC-ANALYZER			
J9	VARC-MEZZ-PINS			
J10	SCSI_CONN	100 pin Dual		Thomas and Betts
J11	VARC-MEZZ-PINS			
J13	SCSI_CONN	100 pin Dual		Thomas and Betts
J14	VARC-MEZZ-PINS			
J16	SCSI_CONN	100 pin Dual		Thomas and Betts
J17	VARC-MEZZ-PINS			
J18	LOGIC-ANALYZER			
J19	SCSI_CONN	100 pin Dual		Thomas and Betts
J20	VARC-MEZZ-PINS			
J22	SCSI_CONN	100 pin Dual		Thomas and Betts
J23	VARC-MEZZ-PINS			
J25	PC_LEMO	PC mount LEMO		
J26	LOGIC-ANALYZER			
JMPR1	JUMPER	2 pin Berg Straight		
JMPR2	JUMPER	2 pin Berg Straight		
JMPR3	JUMPER	2 pin Berg Straight		
JMPR4	JUMPER	2 pin Berg Straight		
JMPR5	JUMPER	2 pin Berg Straight		
JMPR6	JUMPER	2 pin Berg Straight		
JMPR7	JUMPER	2 pin Berg Straight		
JMPR8	JUMPER	2 pin Berg Straight		
JMPR9	JUMPER	2 pin Berg Straight		
JMPR10	JUMPER	2 pin Berg Straight		

JMPR11	JUMPER	2 pin Berg Straight		
JMPR12	JUMPER	2 pin Berg Straight		
JMPR13	JUMPER	2 pin Berg Straight		
JMPR14	JUMPER	2 pin Berg Straight		
JMPR15	JUMPER	2 pin Berg Straight		
JMPR16	JUMPER	2 pin Berg Straight		
JMPR17	JUMPER	2 pin Berg Straight		
JMPR18	JUMPER	2 pin Berg Straight		
JMPR19	JUMPER	2 pin Berg Straight		
JMPR20	JUMPER	2 pin Berg Straight		
JMPR21	JUMPER	2 pin Berg Straight		
JMPR22	JUMPER	2 pin Berg Straight		
JMPR23	JUMPER	2 pin Berg Straight		
JMPR24	JUMPER			
L1	CHOKE			
L2	CHOKE			
L3	CHOKE			
L4	CHOKE			
LED1	LED_W_RES			
LED2	LED_W_RES			
LED3	LED_W_RES			
LED4	LED_BICOLOR			
LED5	LED_W_RES			
LED6	LED_W_RES			
LED7	LED_W_RES			
LED8	LED_W_RES			
LED9	LED_W_RES			
PC1	CAP-POLAR-B	10uF Tantalum	B package	Garrett
PC2	CAP-POLAR-B	10uF Tantalum	B package	
PC3	CAP-POLAR-B	10uF Tantalum	B package	
PC4	CAP-POLAR-B	10uF Tantalum	B package	
PC5	CAP-POLAR-B	10uF Tantalum	B package	
PC6	CAP-POLAR-B	10uF Tantalum	B package	
PC7	CAP-POLAR-B	10uF Tantalum	B package	
PC8	CAP-POLAR-B	10uF Tantalum	B package	
PC9	CAP-POLAR-B	10uF Tantalum	B package	
PC10	CAP-POLAR-B	10uF Tantalum	B package	
R1	RES-805	10K		Garrett
R2	RES-805	10K		
R3	RES-805	10K		
R4	RES-805	10K		
R5	RES-1206-SM	TBD		
R6	RES-1206-SM	TBD		
R7	RES-1206-SM	TBD		
R8	RES-1206-SM	TBD		
R9	RES-805	10K		
R10	RES-805	10K		
R11	RES-805	10K		
R12	RES-805	10K		
R13	RES-805	100 ohm		
R14	RES-805	100 ohm		
R15	RES-1206-SM	TBD		
R16	RES-805	10K		
R17	RES-805	100 ohm		
R18	RES-805	100 ohm		
R19	RES-805	100 ohm		

R20	RES-805	100 ohm		
R21	RES-805	100 ohm		
R22	RES-805	100 ohm		
R23	RES-1206-SM	TBD		
R24	RES-1206-SM	TBD		
R25	RES-1206-SM	TBD		
R26	RES-1206-SM	TBD		
R27	RES-1206-SM	TBD		
R28	RES-1206-SM	TBD		
R29	RES-1206-SM	TBD		
R30	RES-805	10K		
R31	RES-805	10K		
R32	RES350	1M		
R33	RES-805	10K		
R34	RES-805	10K		
R35	RES350	1M		
R36	RES-805	10K		
R37	RES-805	10K		
R38	RES-805	10K		
R39	RES-805	10K		
R40	RES-805	10K		
R41	RES-805	10K		
R42	RES-805	330 ohms		
R43	RES-805	330 ohms		
R44	RES-805	100 ohm		
R45	RES-805	100 ohm		
R46	RES-805	100 ohm		
R47	RES-805	100 ohm		
R48	RES-805	10K		
R49	RES-805	10K		
R50	RES-1206-SM	TBD		
R51	RES-1206-SM	TBD		
R52	RES-1206-SM	TBD		
R53	RES-1206-SM	TBD		
R54	RES-1206-SM	TBD		
R55	RES-1206-SM	TBD		
R56	RES-805	10K		
R57	RES-1206-SM	TBD		
R58	RES-1206-SM	TBD		
R59	RES-805	100 ohm		
R60	RES-805	100 ohm		
R61	RES-805	100 ohm		
R62	RES-805	100 ohm		
R63	RES-805	10K		
R64	RES-805	10K		
R65	RES-1206-SM	TBD		
R66	RES-1206-SM	TBD		
R67	RES-1206-SM	TBD		
R68	RES-1206-SM	TBD		
R69	RES-805	100 ohm		
R70	RES-805	100 ohm		
R71	RES-805	100 ohm		
R72	RES-805	100 ohm		
R73	RES-805	10K		
R74	RES-805	10K		
R75	RES-1206-SM	TBD		
R76	RES-1206-SM	TBD		
R77	RES-1206-SM	TBD		
R78	RES-1206-SM	TBD		
R79	RES-1206-SM	TBD		

R80	RES-1206-SM	TBD		
R81	RES-805	10K		
R82	RES-1206-SM	TBD		
R83	RES-1206-SM	TBD		
R84	RES-805	100 ohm		
R85	RES-805	100 ohm		
R86	RES-805	100 ohm		
R87	RES-805	100 ohm		
R88	RES-805	10K		
R89	RES-805	10K		
R90	RES-1206-SM	TBD		
R91	RES-1206-SM	TBD		
R92	RES-1206-SM	TBD		
R93	RES-1206-SM	TBD		
R94	RES-805	100 ohm		
R95	RES-805	100 ohm		
R96	RES-805	100 ohm		
R97	RES-805	100 ohm		
R98	RES-805	10K		
R99	RES-805	10K		
R100	RES-1206-SM	TBD		
R101	RES-1206-SM	TBD		
R102	RES-1206-SM	TBD		
R103	RES-1206-SM	TBD		
R104	RES-1206-SM	TBD		
R105	RES-1206-SM	TBD		
R106	RES-805	10K		
R107	RES-1206-SM	TBD		
R108	RES-1206-SM	TBD		
R109	RES-805	100 ohm		
R110	RES-805	100 ohm		
R111	RES-805	100 ohm		
R112	RES-805	100 ohm		
R113	RES-805	10K		
R114	RES-805	10K		
R115	RES-1206-SM	TBD		
R116	RES-1206-SM	TBD		
R117	RES-1206-SM	TBD		
R118	RES-1206-SM	TBD		
R119	RES-805	100 ohm		
R120	RES-805	100 ohm		
R121	RES-805	100 ohm		
R122	RES-805	100 ohm		
R123	RES-805	10K		
R124	RES-805	10K		
R125	RES-1206-SM	TBD		
R126	RES-1206-SM	TBD		
R127	RES-1206-SM	TBD		
R128	RES-1206-SM	TBD		
R129	RES-1206-SM	TBD		
R130	RES-1206-SM	TBD		
R131	RES-805	10K		
R132	RES-1206-SM	TBD		
R133	RES-1206-SM	TBD		
R134	RES-805	100 ohm		
R135	RES-805	100 ohm		
R136	RES-805	100 ohm		
R137	RES-805	100 ohm		
R138	RES-805	10K		
R139	RES-805	10K		

R140	RES-1206-SM	TBD		
R141	RES-1206-SM	TBD		
R142	RES-1206-SM	TBD		
R143	RES-1206-SM	TBD		
R144	RES-805	100 ohm		
R145	RES-805	100 ohm		
R146	RES-805	100 ohm		
R147	RES-805	100 ohm		
R148	RES-805	10K		
R149	RES-805	10K		
R150	RES-1206-SM	TBD		
R151	RES-1206-SM	TBD		
R152	RES-1206-SM	TBD		
R153	RES-1206-SM	TBD		
R154	RES-1206-SM	TBD		
R155	RES-1206-SM	TBD		
R156	RES-805	10K		
R157	RES-1206-SM	TBD		
R158	RES-1206-SM	TBD		
R159	RES-805	100 ohm		
R160	RES-805	100 ohm		
R161	RES-805	100 ohm		
R162	RES-805	100 ohm		
R163	RES-805	10K		
R164	RES-805	10K		
R165	RES-1206-SM	TBD		
R166	RES-1206-SM	TBD		
R167	RES-1206-SM	TBD		
R168	RES-1206-SM	TBD		
R169	RES-805	10K		
R170	RES-805	10K		
R171	RES-805	10K		
R172	RES-805	10K		
R173	RES-805	10K		
R174	RES-1206-SM	1K		
R175	RES-1206-SM	1K		
R176	RES-1206-SM	1K		
R177	RES-1206-SM	1K		
R178	RES-1206-SM	1K		
R179	RES-805	0 ohm		
R180	RES-805	0 ohm		
R181	RES-805	100 ohm		
R182	RES-805	100 ohm		
R183	RES-805	0 ohm		
R184	RES-805	0 ohm		
R185	RES-805	100 ohm		
R186	RES-805	100 ohm		
R187	RES-805	0 ohm		
R188	RES-805	0 ohm		
R189	RES350	1M		
R190	RES350	1M		
R191	RES-805	0 ohm		
R192	RES-805	0 ohm		
R193	RES-805	10K		
R194	RES-805	10K		
R195	RES-805	10K		
R196	RES-805	10K		
R197	RES-805	10K		
R198	RES-805	10K		
R199	RES-805	10K		

R200	RES-805	10K		
R201	RES-805	10K		
REG1	LP3963	LP3963ES-2.5		
REG2	LP3963	LP3963ES-2.5		
U1	SSOP 48 Pin .025 pitch	CY74FCT16244T-O		Cypress Semiconductor
U2	QFP 64 pin .031 pitch	CY7C964		Cypress Semiconductor
U3	QFP 64 pin .031 pitch	CY7C964		Cypress Semiconductor
U4	QFP 64 pin .031 pitch	CY7C964		Cypress Semiconductor
U5	QFP 64 pin .031 pitch	CY7C964		Cypress Semiconductor
U6	TSSOP 48 Pin .020 pitch	CY74FCT16245T-Z		Cypress Semiconductor
U7	QFP 64 pin .031 pitch	CY7C4225		Cypress Semiconductor
U8	SOIJ16 16 pin .050 pitch	DS90C031		National Semiconductor
U9	QFP 64 pin .031 pitch	CY7C960-N65		Cypress Semiconductor
U10	QFP 240 pin .020 pitch	VIRTEX2.5-PQ240		Xilinx
U11	SOIJ16 16 pin .050 pitch	DS90C032		National Semiconductor
U12	SOIJ16 16 pin .050 pitch	DS90C031		National Semiconductor
U13	SOIJ16 16 pin .050 pitch	DS90C031		National Semiconductor
U14	SOIJ16 16 pin .050 pitch	DS90C031		National Semiconductor
U15	SOIJ16 16 pin .050 pitch	DS90C031		National Semiconductor
U16	SOIJ16 16 pin .050 pitch	DS90C031		National Semiconductor
U17	SOIJ16 16 pin .050 pitch	DS90C032		National Semiconductor
U18	SOIJ16 16 pin .050 pitch	DS90C031		National Semiconductor
U19	SOIJ16 16 pin .050 pitch	DS90C031		National Semiconductor
U20	SOIJ16 16 pin .050 pitch	DS90C031		National Semiconductor
U21	SOIJ16 16 pin .050 pitch	DS90C031		National Semiconductor
U22	SOIJ16 16 pin .050 pitch	DS90C032		National Semiconductor
U23	SOL20 20 pin .050 pitch	74ACT244SC		Digi-Key
U24	TQ144 .020 pitch	XSC10-PQ144		Xilinx
U25	TSOP 44 pin .031 pitch	CY7C1020-TS		Cypress Semiconductor
U26	TSOP 44 pin .031 pitch	CY7C1020-TS		Cypress Semiconductor
U27	TSOP 44 pin .031 pitch	CY7C1020-TS		Cypress Semiconductor
U28	TSOP 44 pin .031 pitch	CY7C1020-TS		Cypress Semiconductor
U29	SOIJ16 16 pin .050 pitch	DS90C032		National Semiconductor
U30	SOIJ16 16 pin .050 pitch	DS90C032		National Semiconductor
U31	SOIJ16 16 pin .050 pitch	DS90C031		National Semiconductor
U32	PLCC44	XC1802PC44		Xilinx
U33	SSOP 48 Pin .025 pitch	CY74FCT16244T-O		Cypress Semiconductor
U34	SSOP 48 Pin .025 pitch	CY74FCT16244T-O		Cypress Semiconductor
U35	SSOP 48 Pin .025 pitch	CY74FCT16244T-O		Cypress Semiconductor
U36	SSOP 48 Pin .025 pitch	CY74FCT16244T-O		Cypress Semiconductor
U37	SSOP 48 Pin .025 pitch	CY74FCT16244T-O		Cypress Semiconductor
U38	SSOP 48 Pin .025 pitch	CY74FCT16244T-O		Cypress Semiconductor
U39	SSOP 48 Pin .025 pitch	CY74FCT16244T-O		Cypress Semiconductor
U40	QFP 240 pin .020 pitch	VIRTEX2.5-PQ240		Xilinx
U41	TSOP 44 pin .031 pitch	CY7C1020-TS		Cypress Semiconductor
U42	8 Pin DIP	PROM		
U43	8 Pin DIP	PROM		
U44	SOIJ16 16 pin .050 pitch	DS90C032		National Semiconductor
U45	SOIJ16 16 pin .050 pitch	DS90C032		National Semiconductor
U46	SOIJ16 16 pin .050 pitch	DS90C031		National Semiconductor
U47	SOIJ16 16 pin .050 pitch	DS90C031		National Semiconductor
U48	SOL20 20 pin .050 pitch	74ACT244SC		Digi-Key
U49	QFP 240 pin .020 pitch	VIRTEX2.5-PQ240		Xilinx
U50	SOIJ16 16 pin .050 pitch	DS90C031		National Semiconductor
U51	SOIJ16 16 pin .050 pitch	DS90C031		National Semiconductor
U52	SOIJ16 16 pin .050 pitch	DS90C032		National Semiconductor
U53	SOIJ16 16 pin .050 pitch	DS90C031		National Semiconductor
U54	SOIJ16 16 pin .050 pitch	DS90C032		National Semiconductor

U55	QFP 64 pin .031 pitch	CY7C4225		Cypress Semiconductor
U56	SOIJ16 16 pin .050 pitch	DS90C031		National Semiconductor
U57	SOIJ16 16 pin .050 pitch	DS90C031		National Semiconductor
U58	SOIJ16 16 pin .050 pitch	DS90C031		National Semiconductor
U59	SOIJ16 16 pin .050 pitch	DS90C031		National Semiconductor
U60	SOIJ16 16 pin .050 pitch	DS90C031		National Semiconductor
U61	SOIJ16 16 pin .050 pitch	DS90C032		National Semiconductor
U62	SOIJ16 16 pin .050 pitch	DS90C031		National Semiconductor
U63	SOIJ16 16 pin .050 pitch	DS90C031		National Semiconductor
U64	SOL20 20 pin .050 pitch	74ACT244SC		Digi-Key
U65	QFP 240 pin .020 pitch	VIRTEX2.5-PQ240		Xilinx
U66	SOIJ16 16 pin .050 pitch	DS90C031		National Semiconductor
U67	SOIJ16 16 pin .050 pitch	DS90C031		National Semiconductor
U68	SOIJ16 16 pin .050 pitch	DS90C032		National Semiconductor
U69	SOIJ16 16 pin .050 pitch	DS90C031		National Semiconductor
U70	SOIJ16 16 pin .050 pitch	DS90C032		National Semiconductor
U71	QFP 64 pin .031 pitch	CY7C4225		
U72	SOIJ16 16 pin .050 pitch	DS90C031		National Semiconductor
U73	SOIJ16 16 pin .050 pitch	DS90C031		National Semiconductor
U74	SOIJ16 16 pin .050 pitch	DS90C031		National Semiconductor
U75	SOIJ16 16 pin .050 pitch	DS90C031		National Semiconductor
U76	SOIJ16 16 pin .050 pitch	DS90C031		National Semiconductor
U77	SOIJ16 16 pin .050 pitch	DS90C032		National Semiconductor
U78	SOIJ16 16 pin .050 pitch	DS90C031		National Semiconductor
U79	SOIJ16 16 pin .050 pitch	DS90C031		National Semiconductor
U80	SOL20 20 pin .050 pitch	74ACT244SC		Digi-Key
U81	QFP 240 pin .020 pitch	VIRTEX2.5-PQ240		Xilinx
U82	SOIJ16 16 pin .050 pitch	DS90C031		National Semiconductor
U83	SOIJ16 16 pin .050 pitch	DS90C031		National Semiconductor
U84	SOIJ16 16 pin .050 pitch	DS90C032		National Semiconductor
U85	SOIJ16 16 pin .050 pitch	DS90C031		National Semiconductor
U86	SOIJ16 16 pin .050 pitch	DS90C032		National Semiconductor
U87	QFP 64 pin .031 pitch	CY7C4225		
U88	SOIJ16 16 pin .050 pitch	DS90C031		National Semiconductor
U89	SOIJ16 16 pin .050 pitch	DS90C031		National Semiconductor
U90	SOIJ16 16 pin .050 pitch	DS90C031		National Semiconductor
U91	SOIJ16 16 pin .050 pitch	DS90C031		National Semiconductor
U92	SOIJ16 16 pin .050 pitch	DS90C031		National Semiconductor
U93	SOIJ16 16 pin .050 pitch	DS90C032		National Semiconductor
U94	SOIJ16 16 pin .050 pitch	DS90C031		National Semiconductor
U95	SOIJ16 16 pin .050 pitch	DS90C031		National Semiconductor
U96	SOL20 20 pin .050 pitch	74ACT244SC		Digi-Key
U97	QFP 240 pin .020 pitch	VIRTEX2.5-PQ240		Xilinx
U98	SOIJ16 16 pin .050 pitch	DS90C031		National Semiconductor
U99	SOIJ16 16 pin .050 pitch	DS90C031		National Semiconductor
U100	SOIJ16 16 pin .050 pitch	DS90C032		National Semiconductor
U101	SOIJ16 16 pin .050 pitch	DS90C031		National Semiconductor
U102	SOIJ16 16 pin .050 pitch	DS90C032		National Semiconductor
U103	QFP 64 pin .031 pitch	CY7C4225		
U104	SOIJ16 16 pin .050 pitch	DS90C031		National Semiconductor
U105	SOIJ16 16 pin .050 pitch	DS90C031		National Semiconductor
U106	SOIJ16 16 pin .050 pitch	DS90C031		National Semiconductor
U107	SOIJ16 16 pin .050 pitch	DS90C031		National Semiconductor
U108	SOIJ16 16 pin .050 pitch	DS90C031		National Semiconductor
U109	SOIJ16 16 pin .050 pitch	DS90C032		National Semiconductor
U110	SOIJ16 16 pin .050 pitch	DS90C031		National Semiconductor
U111	SOIJ16 16 pin .050 pitch	DS90C031		National Semiconductor
U112	SOL20 20 pin .050 pitch	74ACT244SC		Digi-Key
U113	QFP 240 pin .020 pitch	VIRTEX2.5-PQ240		Xilinx
U114	SOIJ16 16 pin .050 pitch	DS90C031		National Semiconductor

U115	SOIJ16 16 pin .050 pitch	DS90C031		National Semiconductor
U116	SOIJ16 16 pin .050 pitch	DS90C032		National Semiconductor
U117	SOIJ16 16 pin .050 pitch	DS90C031		National Semiconductor
U118	SOIJ16 16 pin .050 pitch	DS90C032		National Semiconductor
U119	QFP 64 pin .031 pitch	CY7C4225		Cypress Semiconductor
U120	SOIJ16 16 pin .050 pitch	DS90C031		National Semiconductor
U121	SOIJ16 16 pin .050 pitch	DS90C031		National Semiconductor
U122	SOIJ16 16 pin .050 pitch	DS90C031		National Semiconductor
U123	SOIJ16 16 pin .050 pitch	DS90C031		National Semiconductor
U124	SOIJ16 16 pin .050 pitch	DS90C031		National Semiconductor
U125	SOL20 20 pin .050 pitch	74ACT244SC		Digi-Key
U126	TSSOP 48 Pin .020 pitch	CY74FCT16245T-Z		
X1		CRYSTAL		

MINOS VRC Mezzanine Module Board Description

Introduction

The VRC Mezzanine Module (VMM) is a 4 layer printed circuit board. It has a socket on the bottom side to connect to the VRB board. It is further stabilized by 3 standoffs of XX inches. There are 2 input connectors at the front panel which receive signals from the VA Front End Board. For details of construction and layout refer to the attached drawings in this document.

Materials and Construction

This is a 4 layer board made of FR4 material 0.062" thick.

Traces are 1 oz copper.

Finish plating is solder mask over bare copper. The solder mask is green.

Board dimensions are 2" x 6".

White silk screen on top and bottom show component outlines only. Reference designators can be found on the assembly drawings.

Line width/space is 7 mils. All signal tracks are 7 mils; input traces are 14 mils, width chosen for input inpedance matching. Power supply traces are typically 15 mils and very short, with 50 mil input lines from the connector. Power is supplied by the VRC board.

Vias are 13 mil plated through holes covered by solder mask, larger vias (38 mils) were used at the power inputs from the connector and at the regulators.

All clearances were set to 10 mils.

Board Layer description

Top layer has components and short traces. It is covered with the analog ground copper pour.

Layer 2 has traces and a +5V digital copper pour for the CY74FCT16244 buffer.

Layer 3 has fewer traces along with the –5V copper pour and the digital ground pour.

Bottom layer has components and traces. It is covered with the +5V analog copper pour.

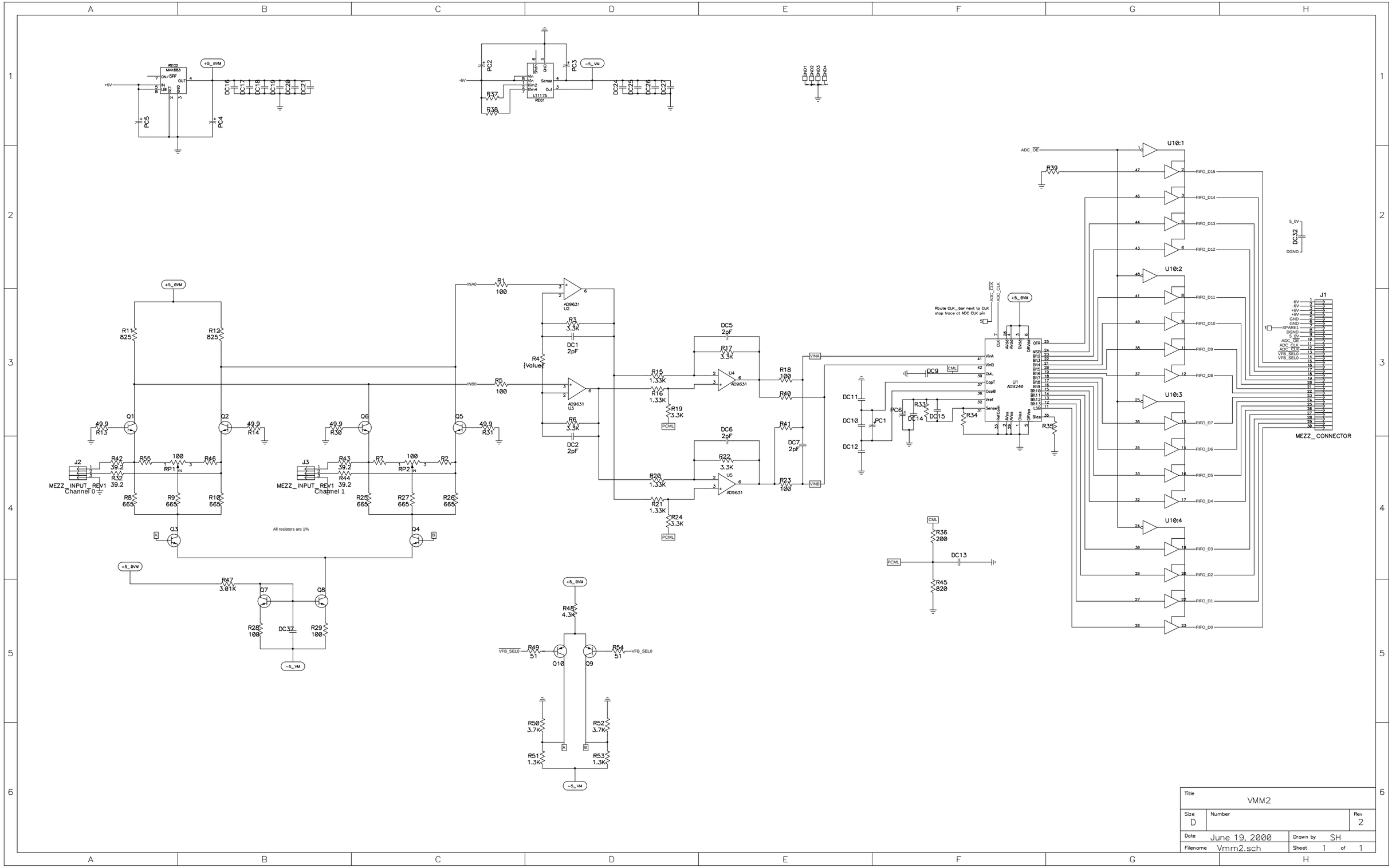

Title	VMM2
Size	D
Number	
Rev	2
Date	June 19, 2000
Drawn by	SH
Filename	Vmm2.sch
Sheet	1 of 1

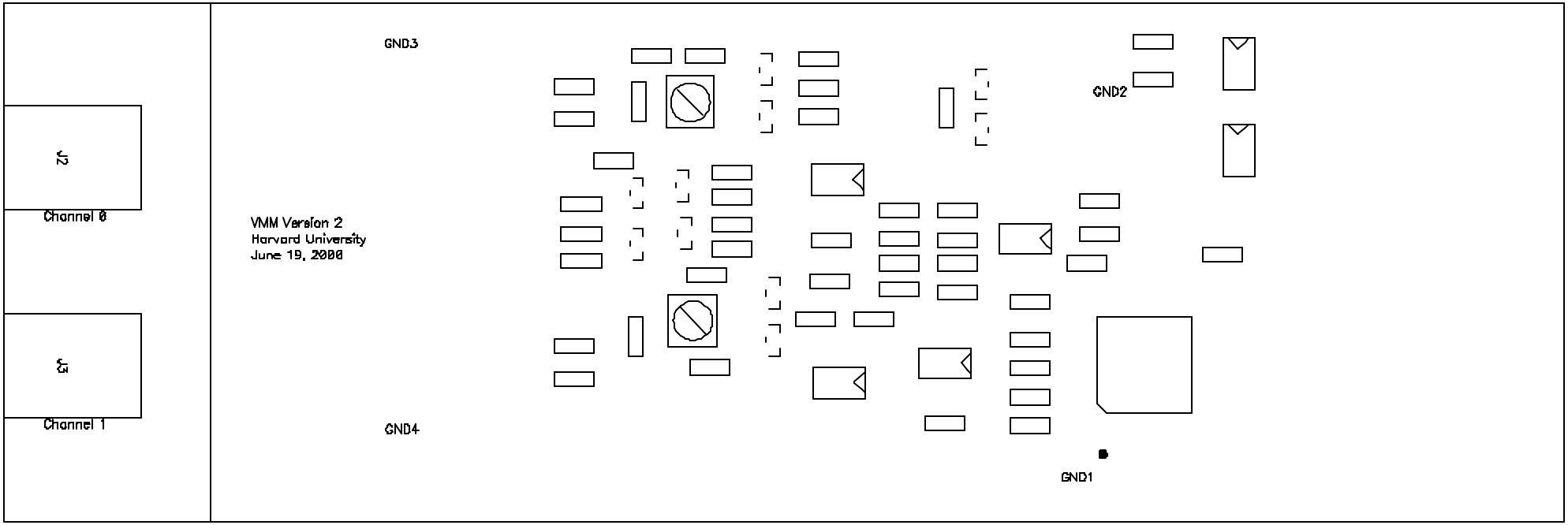
GND3
GND2
J2
Channel 0
VMM Version 2
Harvard University
June 19, 2000
J3
Channel 1
GND4
GND1

Top Silk

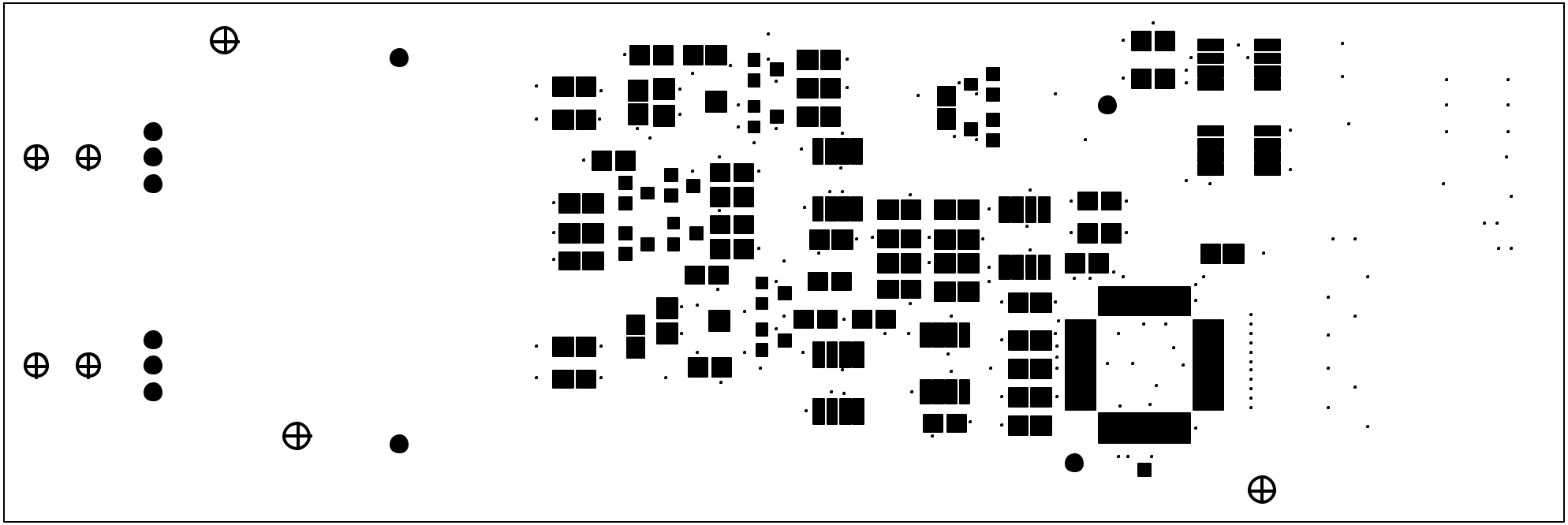

Top Mask

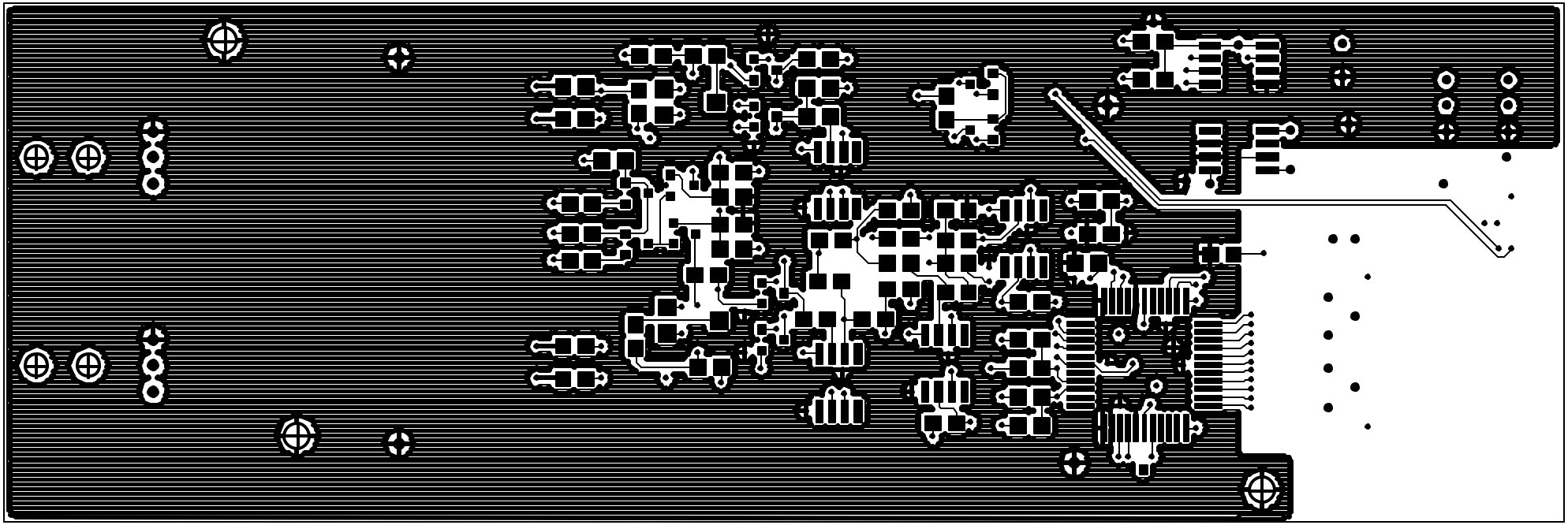

Top

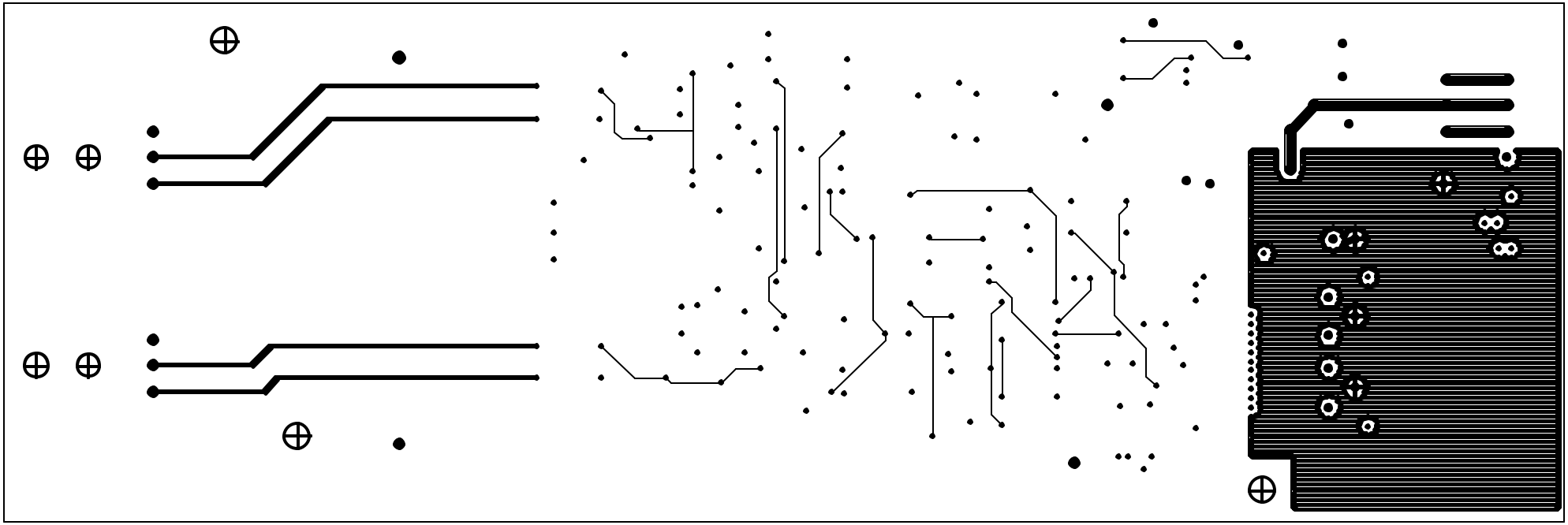

Layer 2

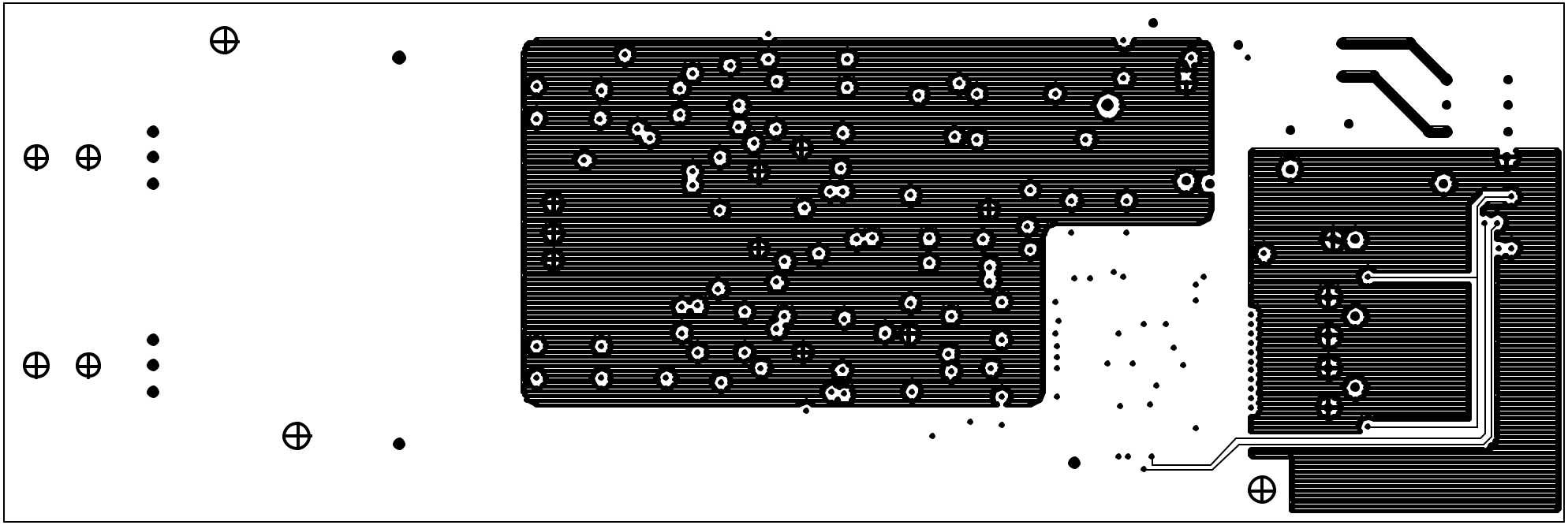

Layer 3

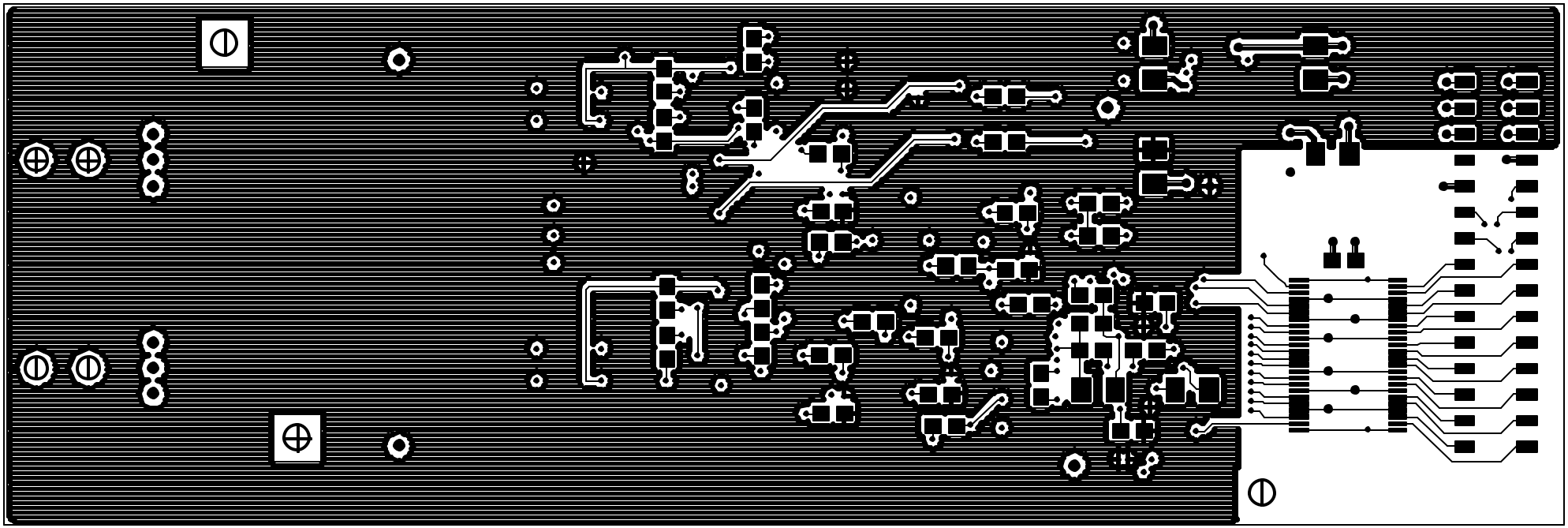

Bottom

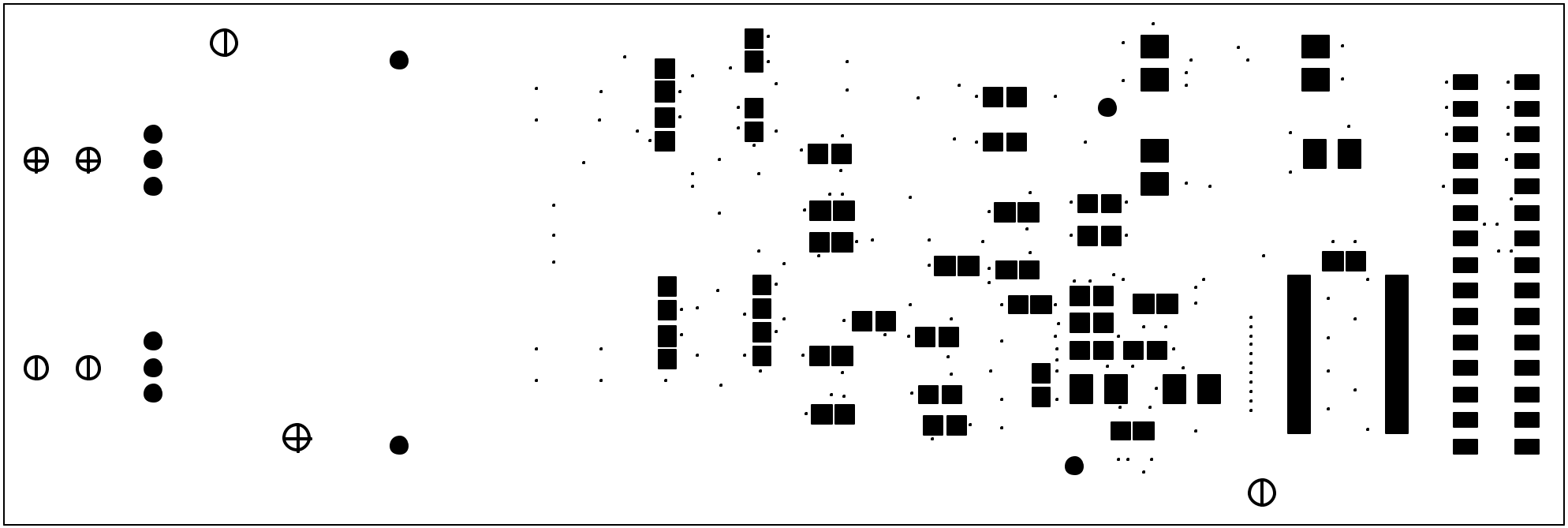

Bottom Mask

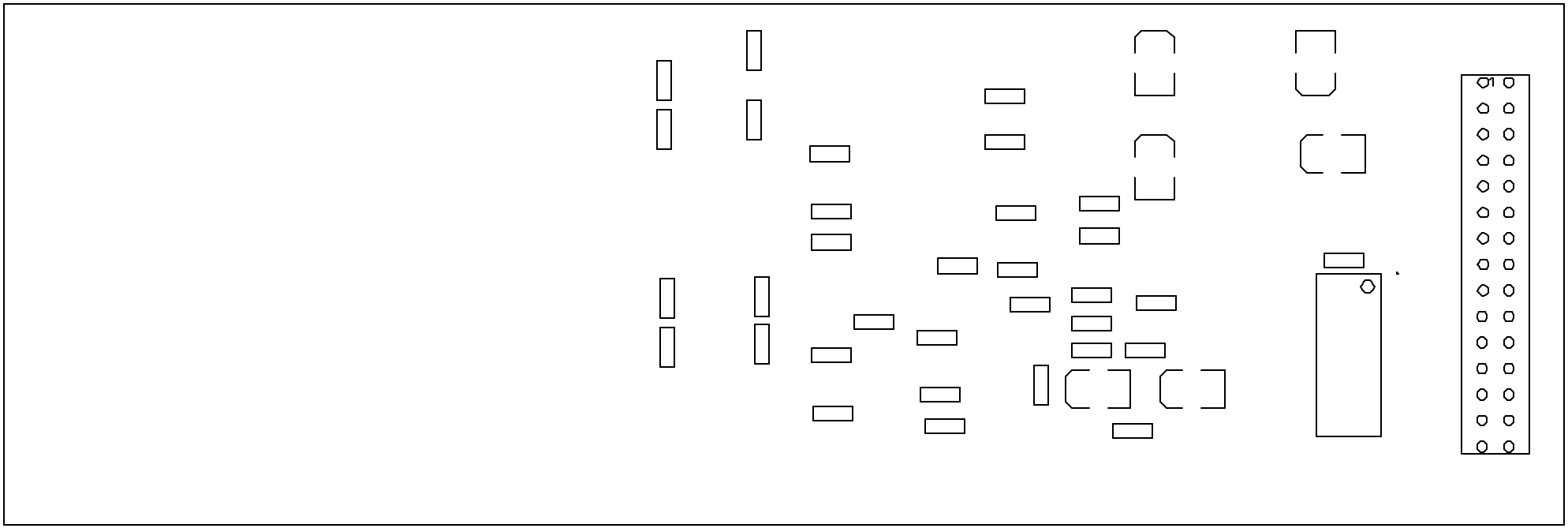

Bottom Silk

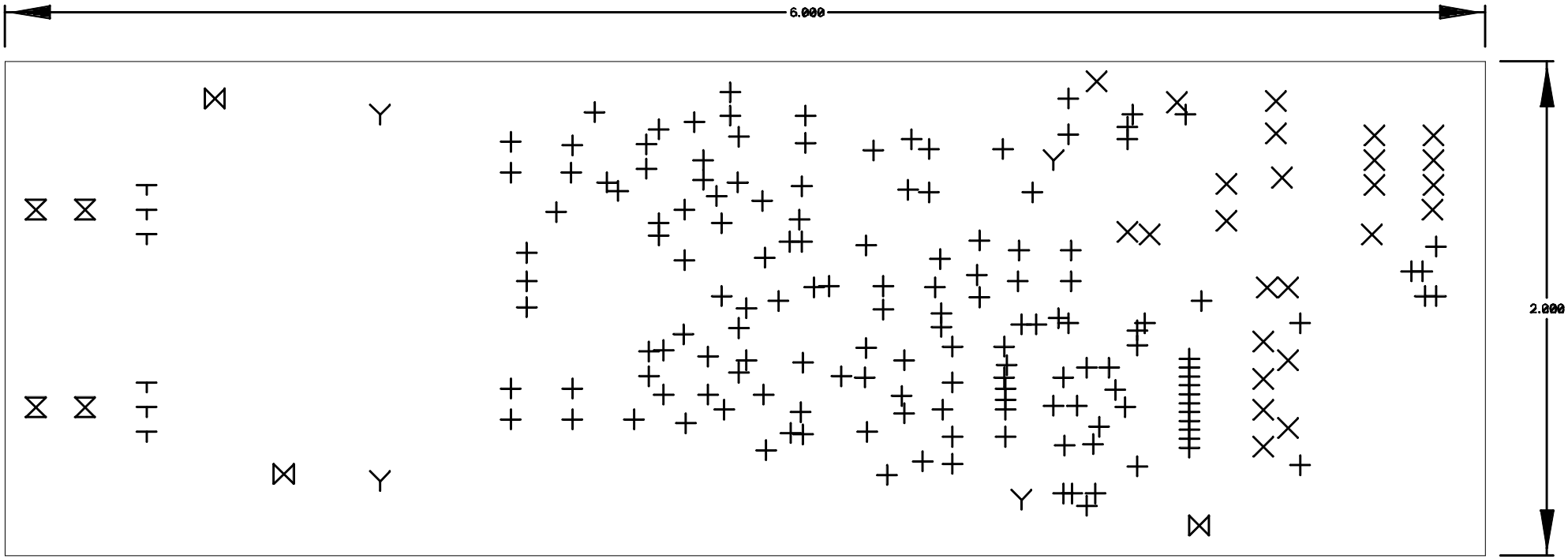

Drill and Board

Drill Symbol Table		
Hole Dia (inch)	Symbol	Quantity
0.013		152
0.018		25
0.038		4
0.045		6
0.100		4
0.110		3

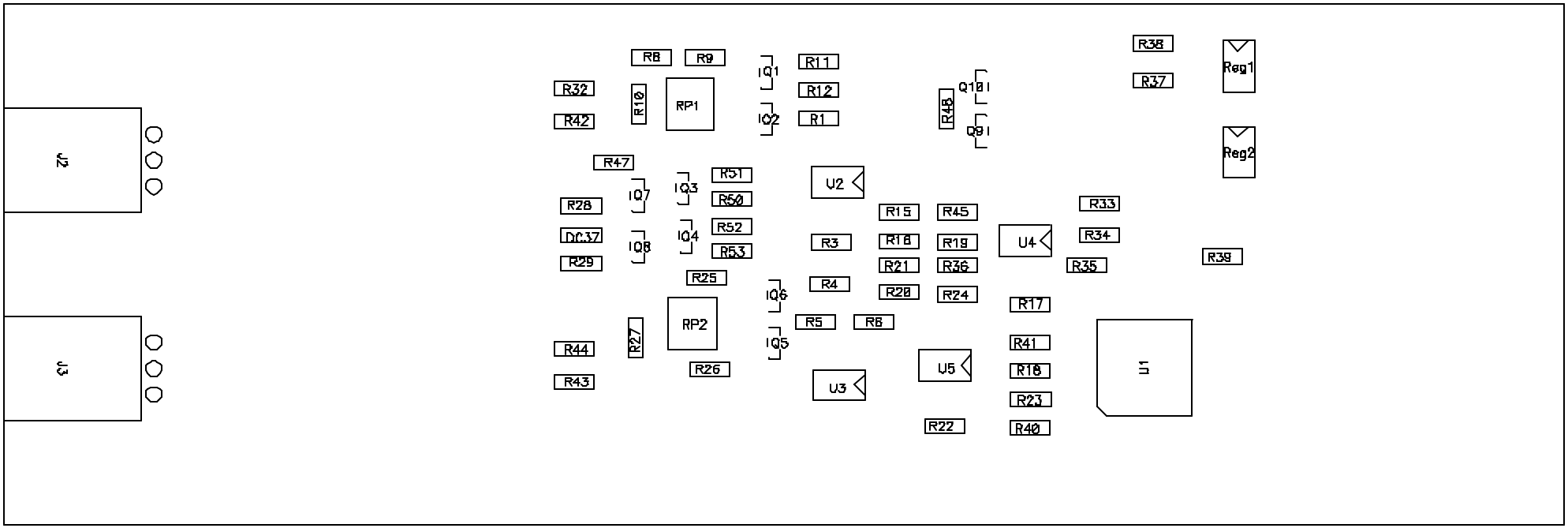
J2
J3
R32
R42
R8
R9
R10
RP1
Q1
Q2
R11
R12
R1
R48
Q10
Q9
R38
R37
Reg1
Reg2
R47
Q7
Q8
Q3
Q4
R51
R50
R52
R53
U2
R28
DC37
R29
R25
RP2
R27
R44
R43
R26
Q6
Q5
R3
R4
R5
R6
U3
R15
R16
R21
R20
R45
R19
R36
R24
U5
R22
U4
R17
R41
R18
R23
R40
R33
R34
R35
U1
R39

-4846, 120
R13
R14
R55
R45
R49
R54
PC3
PC4
PC2
PC5
DC26
DC18
DC1
DC24
DC15
DC14
DC32
DC16
DC13
DC12
DC21
DC5
DC10
DC11
DC9
DC20
DC7
DC2
DC25
DC27
DC17
DC6
DC19
R30
R31
R7
R2
U10
PC6
PC1
J1
-4560, -1370
-820, -1380

Count	RefDes	ComponentName	Value	PatternName	Description
Ics					
1	U1	AD9240		QFP-44-.031	
1	U2	AD9631		SO8	
1	U3	AD9631		SO8	
1	U4	AD9631		SO8	
1	U5	AD9631		SO8	
1	U10	CY74FCT244T-O		SSOP-48-.025	
Caps					
1	DC1	CAP-805	10 pf	RC0805	
1	DC2	CAP-805	10 pF	RC0805	
1	DC5	CAP-805	20pF	RC0805	
1	DC6	CAP-805	20pF	RC0805	
1	DC7	CAP-805	15pF	RC0805	
1	DC9	CAP-805	0.1uF	RC0805	
1	DC10	CAP-805	0.1uF	RC0805	
1	DC11	CAP-805	0.1uF	RC0805	
1	DC12	CAP-805	0.1uF	RC0805	
1	DC13	CAP-805	0.1uF	RC0805	
1	DC14	CAP-805	0.1uF	RC0805	
1	DC15	CAP-805	0.1uF	RC0805	
1	DC16	CAP-805	0.1uF	RC0805	
1	DC17	CAP-805	0.1uF	RC0805	
1	DC18	CAP-805	0.1uF	RC0805	
1	DC19	CAP-805	0.1uF	RC0805	
1	DC20	CAP-805	0.1uF	RC0805	
1	DC21	CAP-805	0.1uF	RC0805	
1	DC24	CAP-805	0.1uF	RC0805	
1	DC25	CAP-805	0.1uF	RC0805	
1	DC26	CAP-805	0.1uF	RC0805	
1	DC27	CAP-805	0.1uF	RC0805	
1	DC32	CAP-805	0.1uF	RC0805	
1	DC37	CAP-805	0.1uF	RC0805	
Polarized	Caps				
1	PC1	CAP-POLAR-B	4.7uF	CAP_CASEB_3528	
1	PC2	CAP-POLAR-B	4.7uF	CAP_CASEB_3528	
1	PC3	CAP-POLAR-B	4.7uF	CAP_CASEB_3528	
1	PC4	CAP-POLAR-B	4.7uF	CAP_CASEB_3528	
1	PC5	CAP-POLAR-B	4.7uF	CAP_CASEB_3528	
1	PC6	CAP-POLAR-B	4.7uF	CAP_CASEB_3528	
Regulators					
1	REG1	LT1175		SO8	
1	REG2	MAX883		SO8	
Conns					
1	J1	MEZZ_CONNECTOR		CONN30_100	
1	J2	MEZZ_INPUT_REV1		GORE_CONN_45	

1	J3	MEZZ_INPUT_REV1		GORE_CONN_45	
Transistors					
1	Q1	BFS17H	NPN	SOT-23(BEC)	
1	Q2	BFS17H	NPN	SOT-23(BEC)	
1	Q3	BFS17H	NPN	SOT-23(BEC)	
1	Q4	BFS17H	NPN	SOT-23(BEC)	
1	Q5	CMPT3904	NPN	SOT-23(BEC)	
1	Q6	CMPT3904	NPN	SOT-23(BEC)	
1	Q7	CMPT3904	NPN	SOT-23(BEC)	
1	Q8	CMPT3904	NPN	SOT-23(BEC)	
1	Q9	MMBT3906	PNP	SOT-23(BEC)	
1	Q10	MMBT3906	PNP	SOT-23(BEC)	
Pots					
1	RP1	POT-SM	100 ohms	POT_SM	Potentiometer
1	RP2	POT-SM	100 ohms	POT_SM	Potentiometer
Resistors					
1	R1	RES-805	100	RC0805	
1	R2	RES-805	90	RC0805	
1	R3	RES-805	274	RC0805	
1	R4	RES-805	374	RC0805	
1	R5	RES-805	100	RC0805	
1	R6	RES-805	274	RC0805	
1	R7	RES-805	147	RC0805	
1	R8	RES-805	665	RC0805	
1	R9	RES-805	665	RC0805	
1	R10	RES-805	665	RC0805	
1	R11	RES-805	825	RC0805	
1	R12	RES-805	825	RC0805	
1	R13	RES-805	49.9	RC0805	
1	R14	RES-805	49.9	RC0805	
1	R15	RES-805	665	RC0805	
1	R16	RES-805	665	RC0805	
1	R17	RES-805	422	RC0805	
1	R18	RES-805	100	RC0805	
1	R19	RES-805	845	RC0805	
1	R20	RES-805	665	RC0805	
1	R21	RES-805	665	RC0805	
1	R22	RES-805	422	RC0805	
1	R23	RES-805	100	RC0805	
1	R24	RES-805	845	RC0805	
1	R25	RES-805	665	RC0805	
1	R26	RES-805	665	RC0805	
1	R27	RES-805	665	RC0805	
1	R28	RES-805	100	RC0805	
1	R29	RES-805	100	RC0805	
1	R30	RES-805	49.9	RC0805	
1	R31	RES-805	49.9	RC0805	
1	R32	RES-805	39.2	RC0805	

1	R33	RES-805	1K	RC0805	
1	R34	RES-805	1K	RC0805	
1	R35	RES-805	3.9K	RC0805	
1	R36	RES-805	omit	RC0805	
1	R37	RES-805	tbd	RC0805	
1	R38	RES-805	tbd	RC0805	
1	R39	RES-805	1K	RC0805	
1	R40	RES-805	tbd	RC0805	
1	R41	RES-805	tbd	RC0805	
1	R42	RES-805	39.2	RC0805	
1	R43	RES-805	39.2	RC0805	
1	R44	RES-805	39.2	RC0805	
1	R45	RES-805	0	RC0805	
1	R46	RES-805	422	RC0805	
1	R47	RES-805	1.0K	RC0805	
1	R48	RES-805	4.3K	RC0805	
1	R49	RES-805	51	RC0805	
1	R50	RES-805	3.7K	RC0805	
1	R51	RES-805	1.3K	RC0805	
1	R52	RES-805	3.7K	RC0805	
1	R53	RES-805	1.3K	RC0805	
1	R54	RES-805	51	RC0805	
1	R55	RES-805	147	RC0805	