Primary Beam Design and Installation

- Introduction, P. Lucas (5 mins)
- Extraction, Transport and Targeting, P. Lucas (30 mins)
- Vacuum, T. Anderson or alternate, (10 mins)
- Installation, T. Anderson or alternate, R. Woods, D. Pushka (45 mins)
- Schedule constraints and summary, S. Childress (20 mins)

NUMI

MINOS

Extraction, Transport and Targeting

P. Lucas

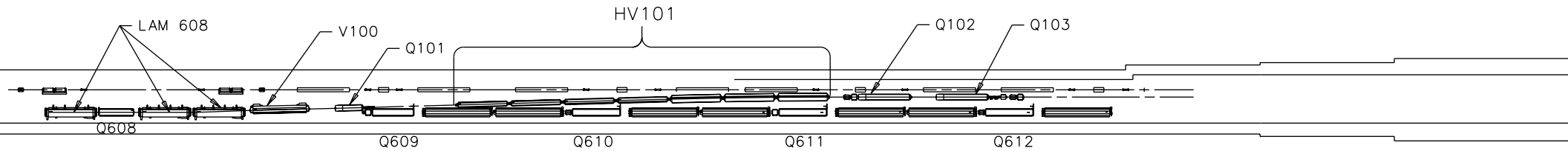

MI 60 REGION AT THE MAIN INJECTOR (ELEVATION VIEW)

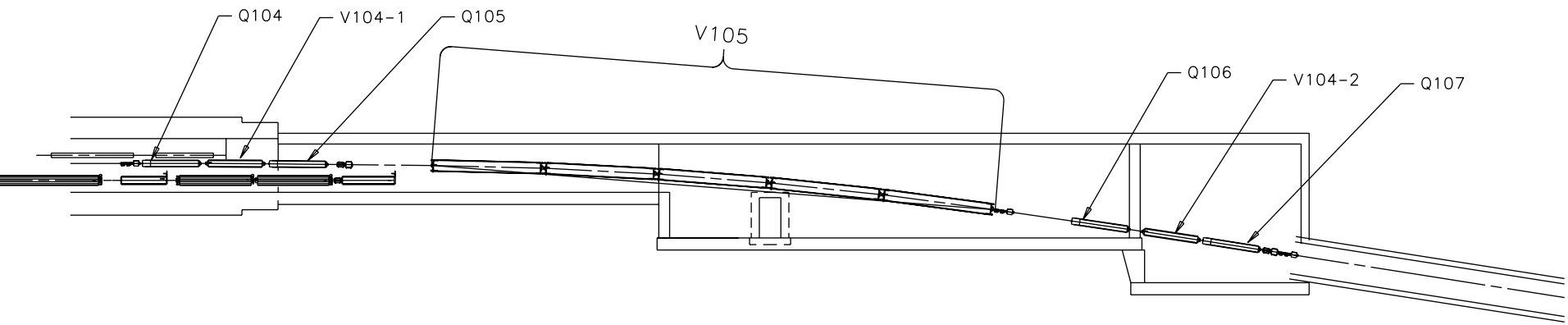

NuMI STUB (ELEVATION VIEW)

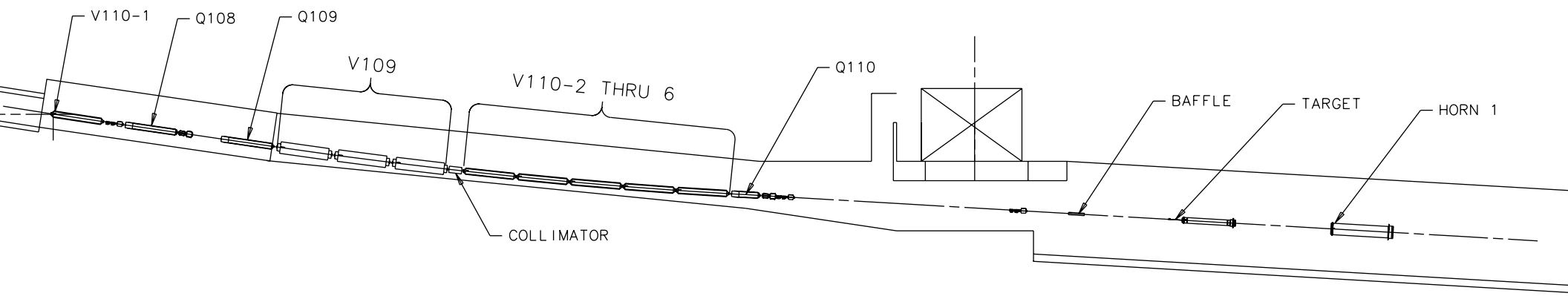

PRETARGET TUNNEL (ELEVATION VIEW)

NUMI

MINOS

Beta Functions

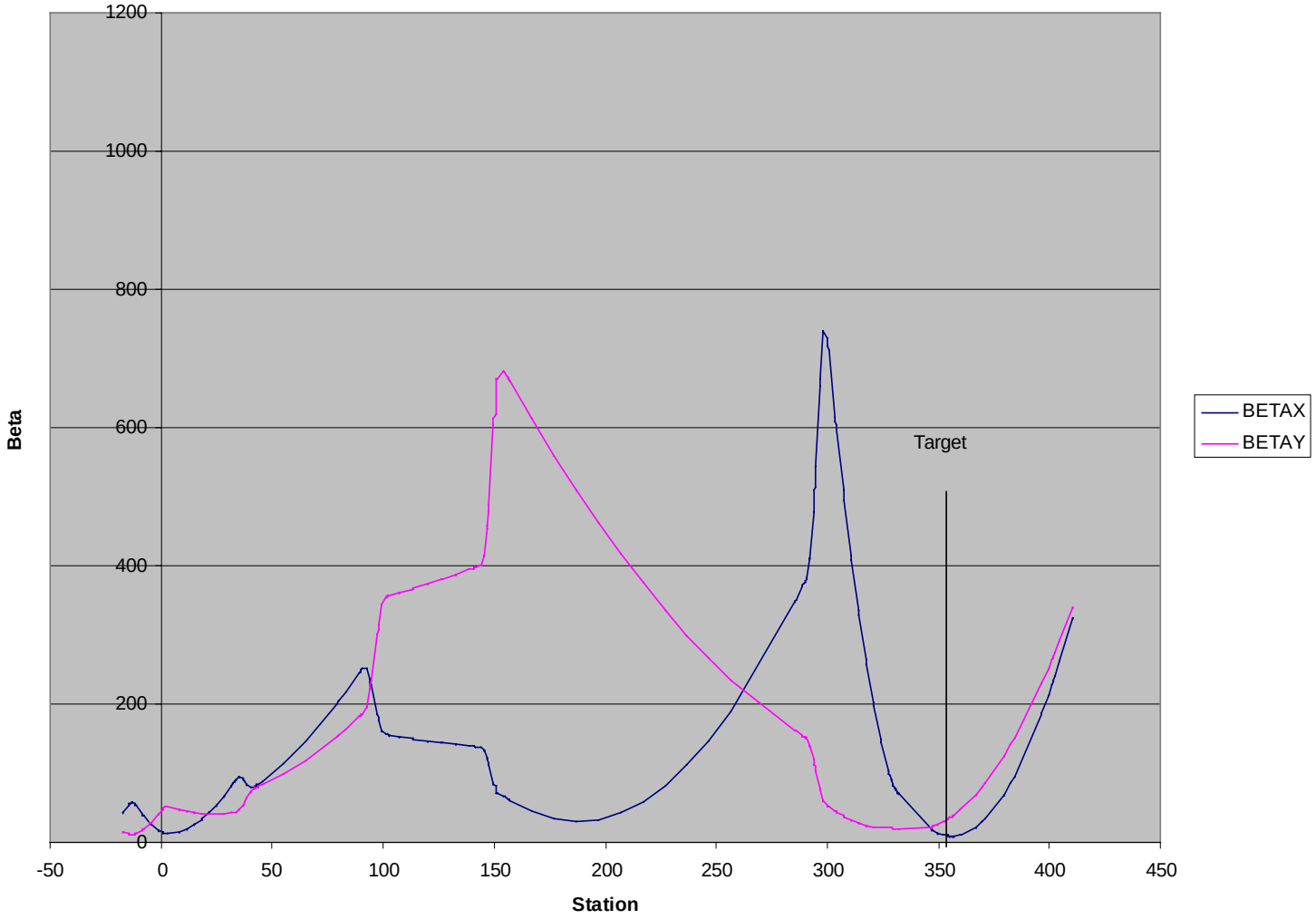

NUMI

MINOS

Eta Functions

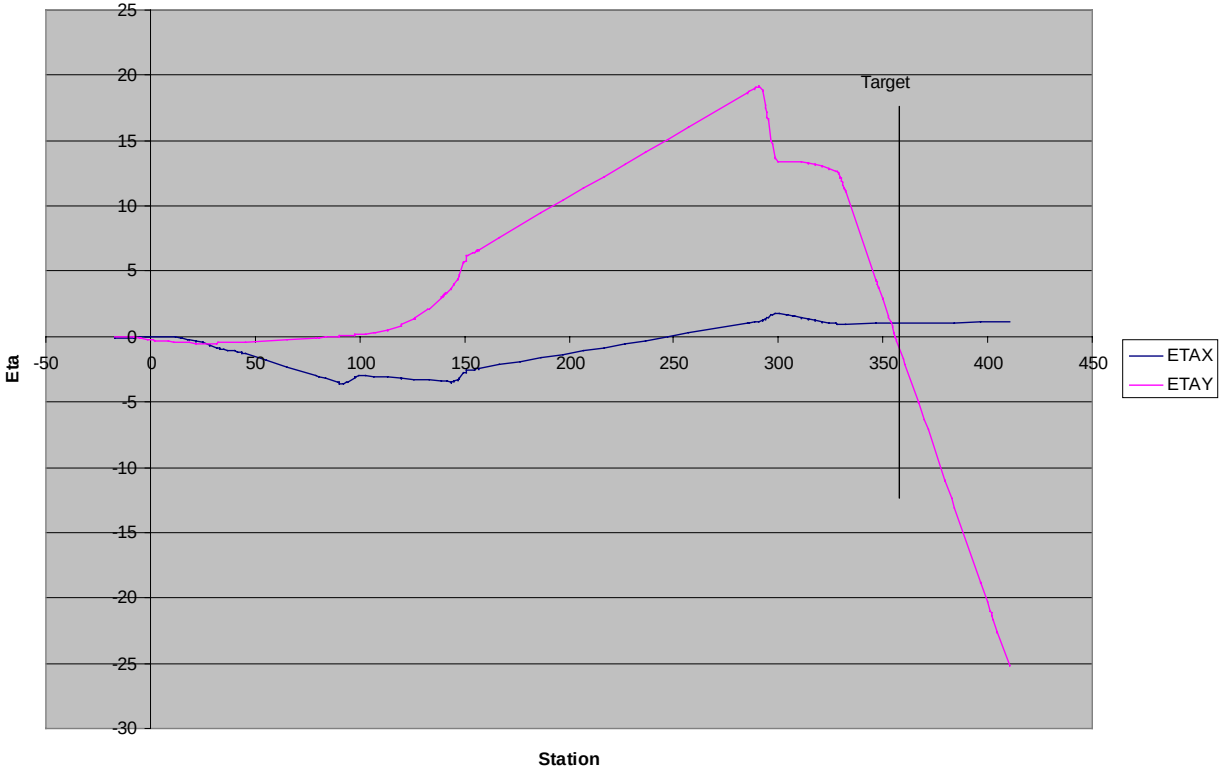

NUMI

MINOS

Trims and Instrumentation, Horizontal

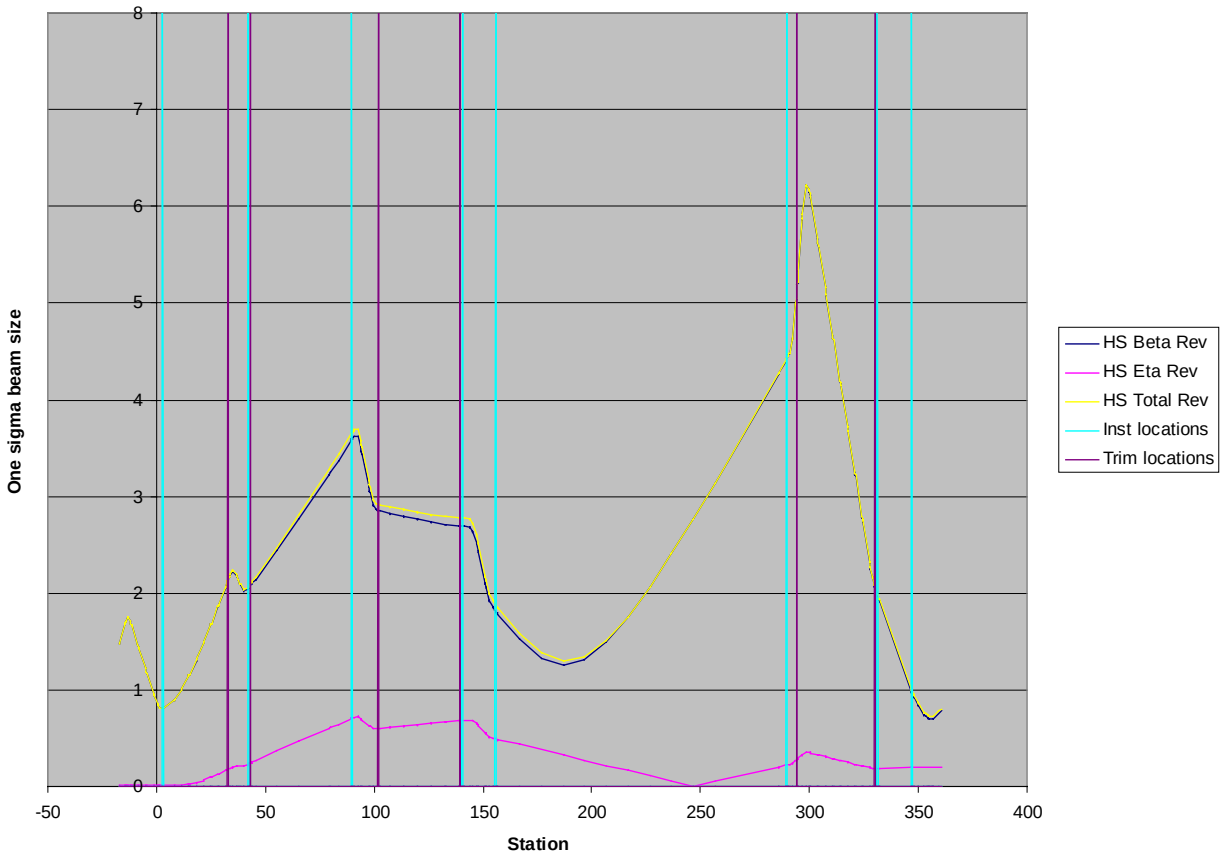

NUMI

MINOS

Trims and Instrumentation, Vertical

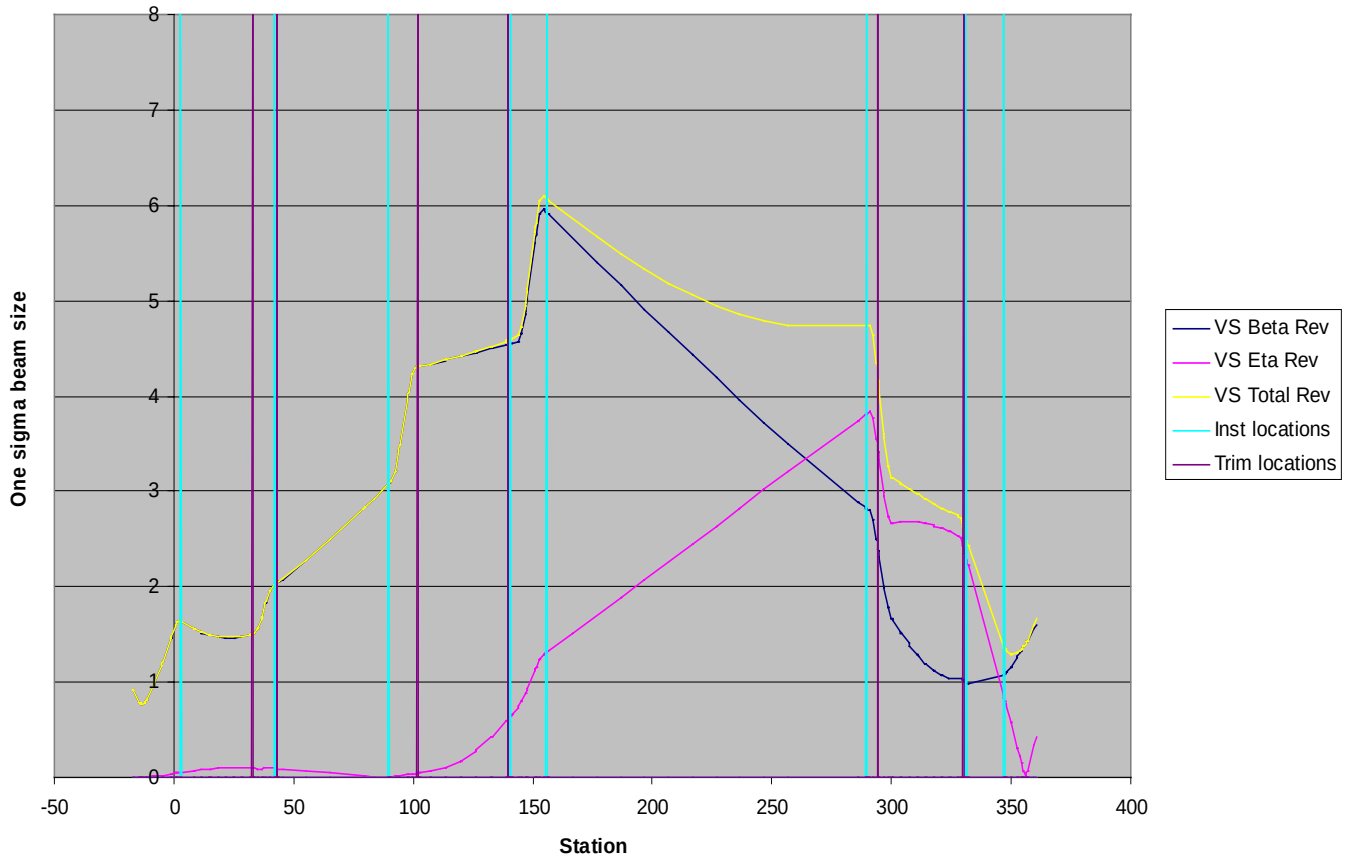

NUMI

MINOS

Aperture Plot

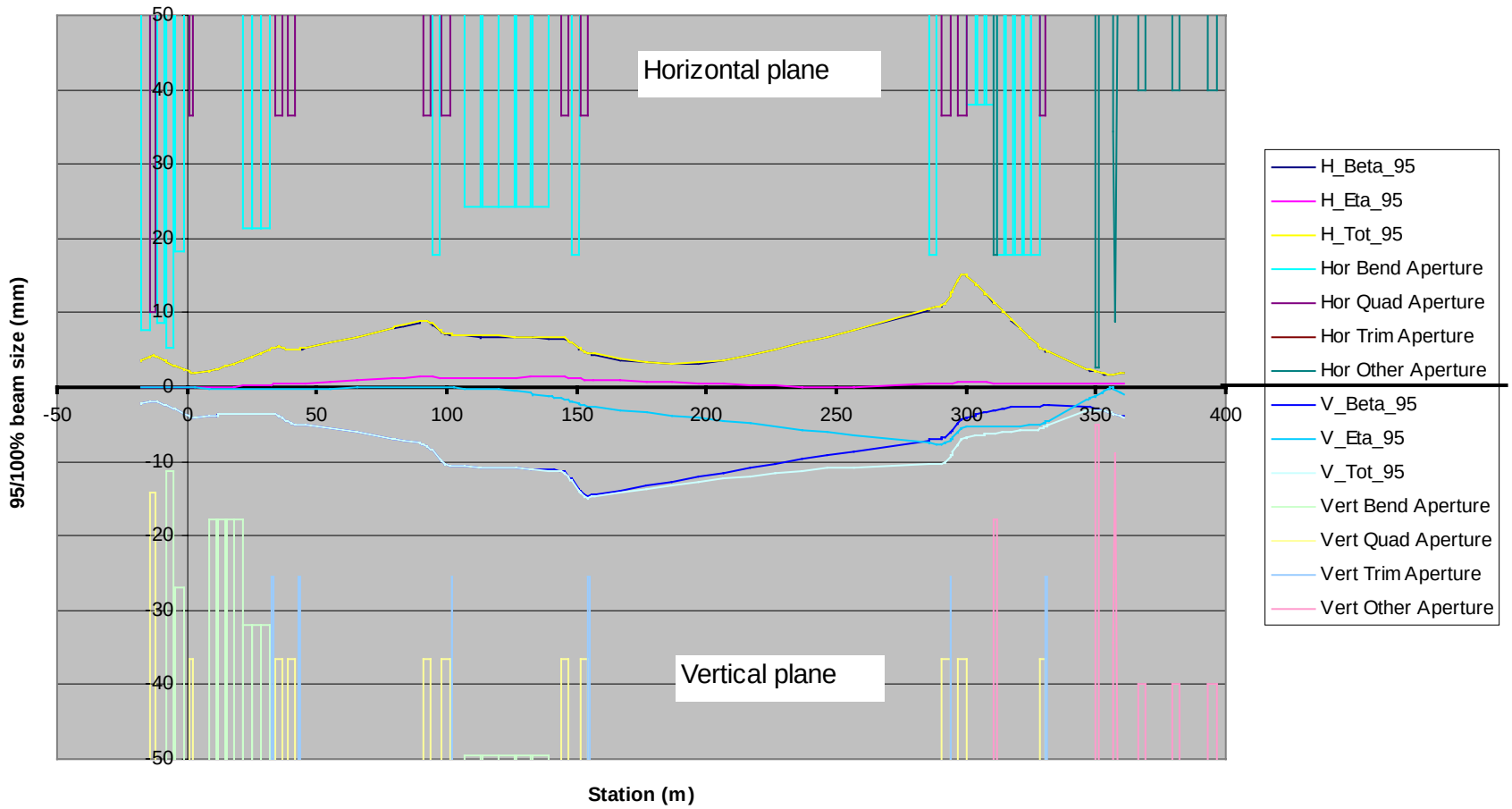

NUMI

MINOS

Effects of Horizontal Quad Displacements

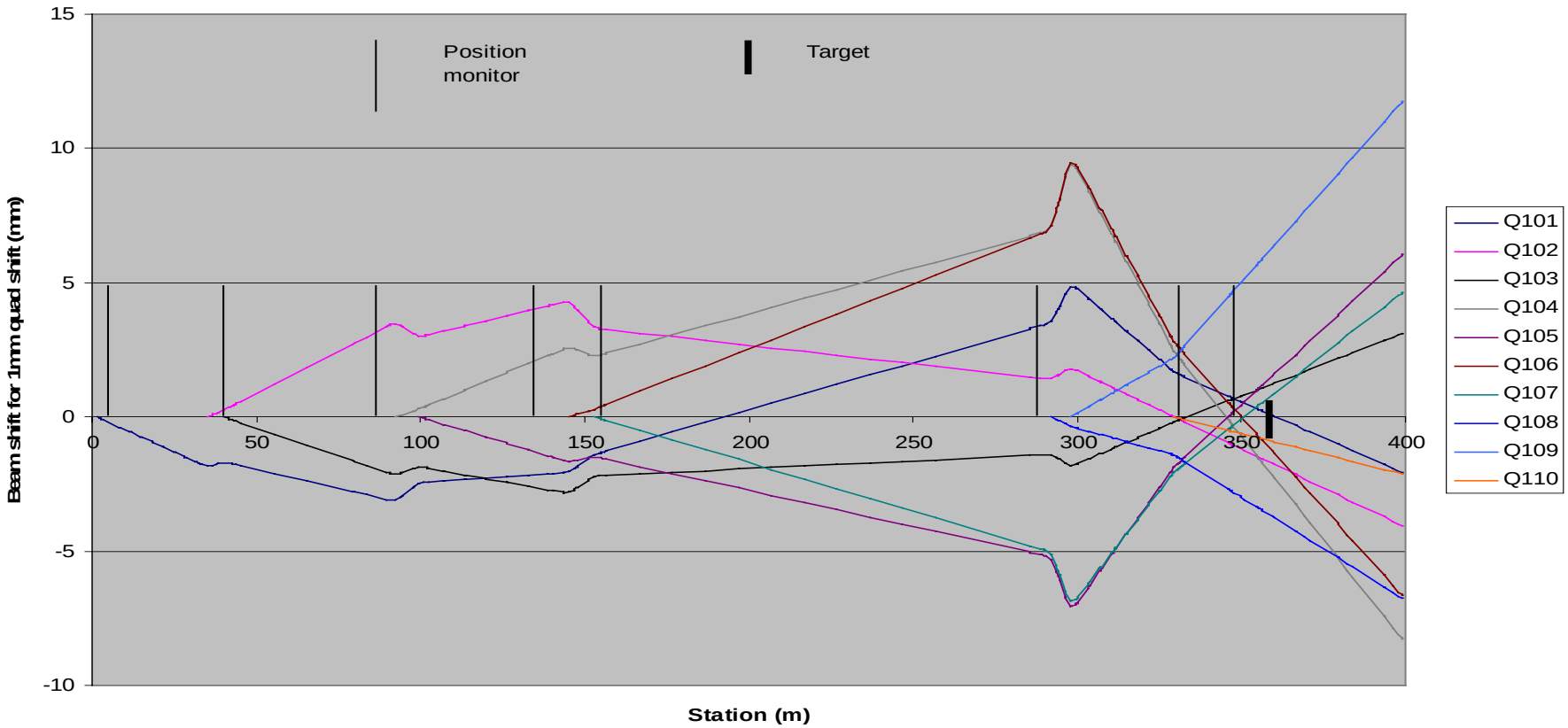

NUMI

MINOS

Effects Vertical Quad Displacements

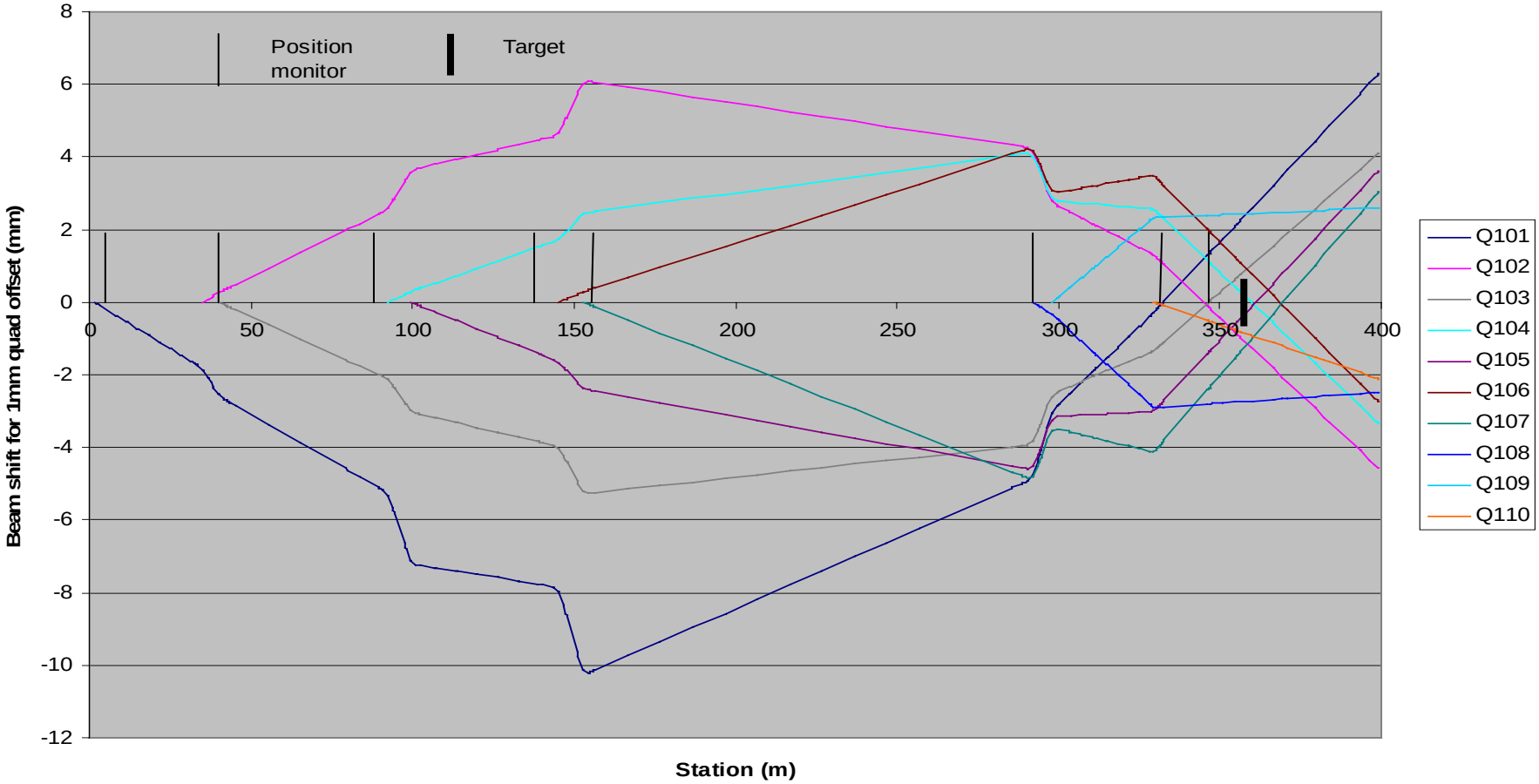

Horizontal Corrector Ranges

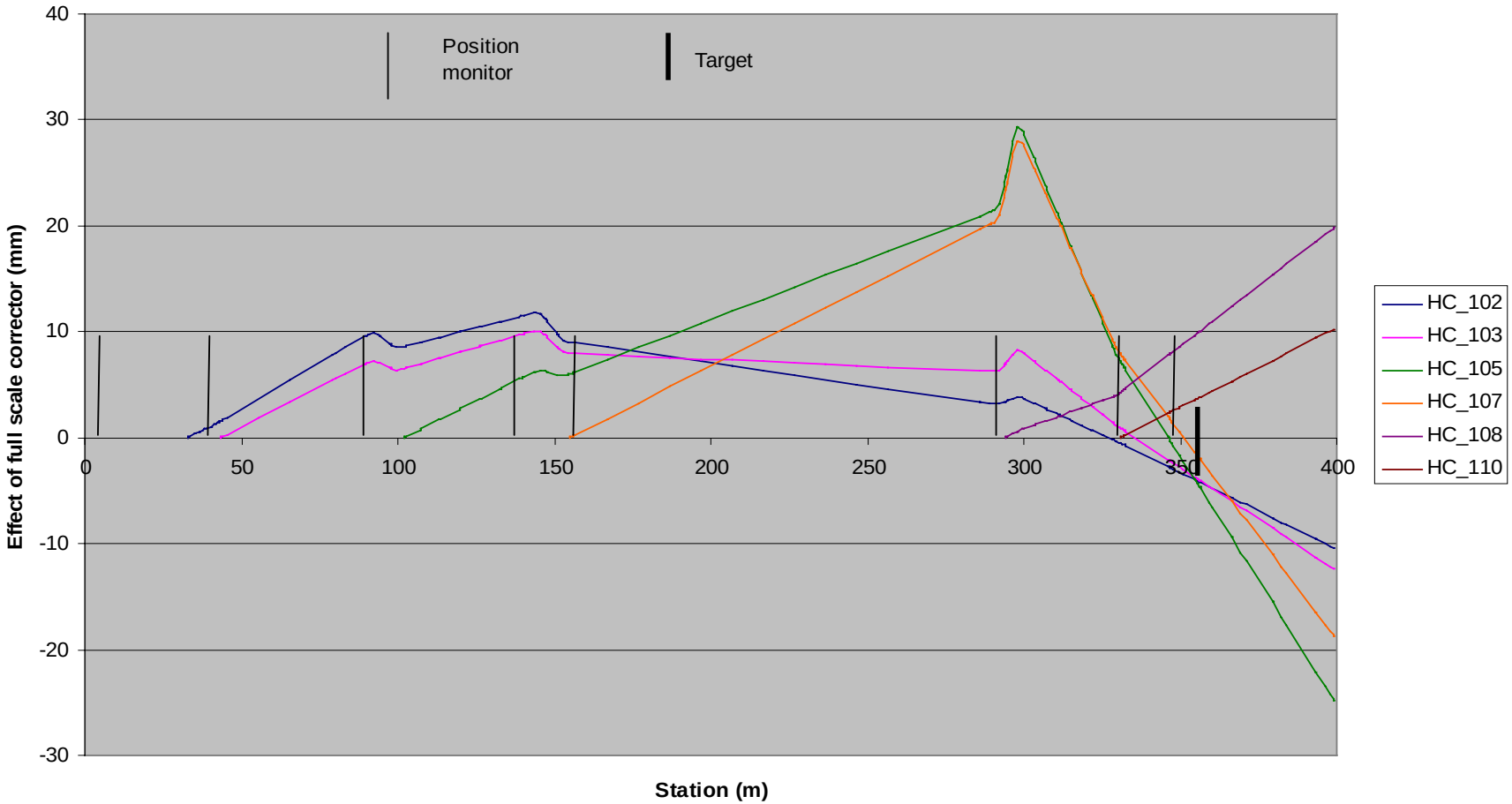

NUMI

MINOS
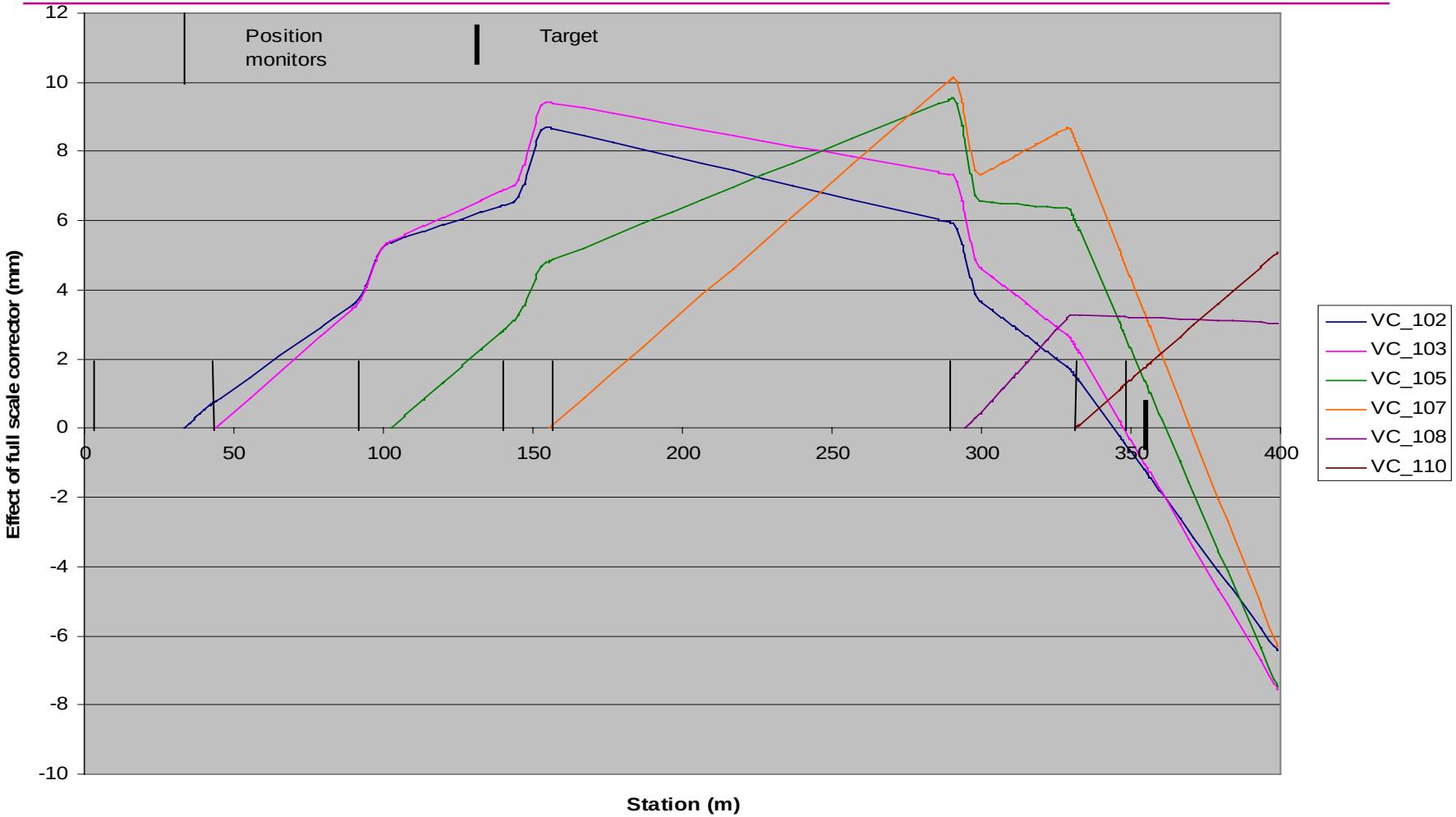
Vertical Corrector Ranges