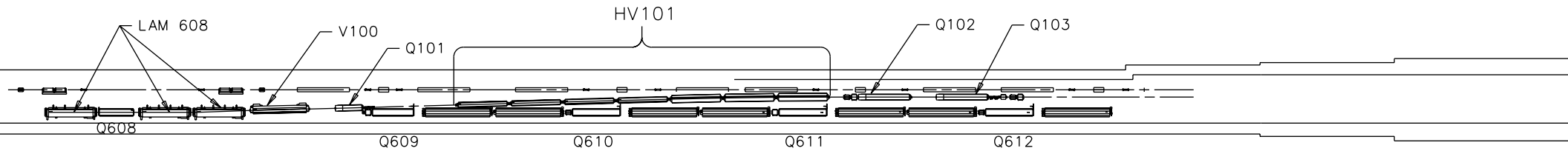

MI 60 REGION AT THE MAIN INJECTOR (ELEVATION VIEW)

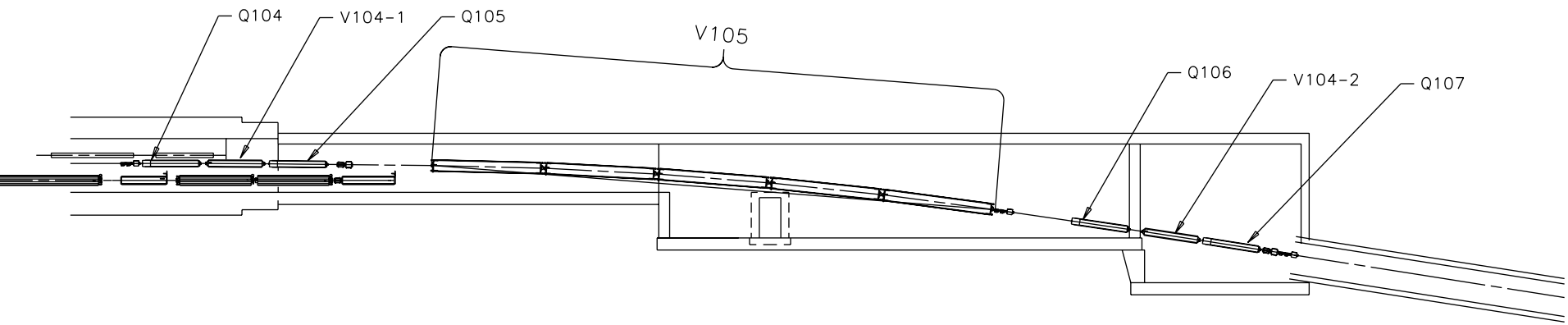

NuMI STUB (ELEVATION VIEW)

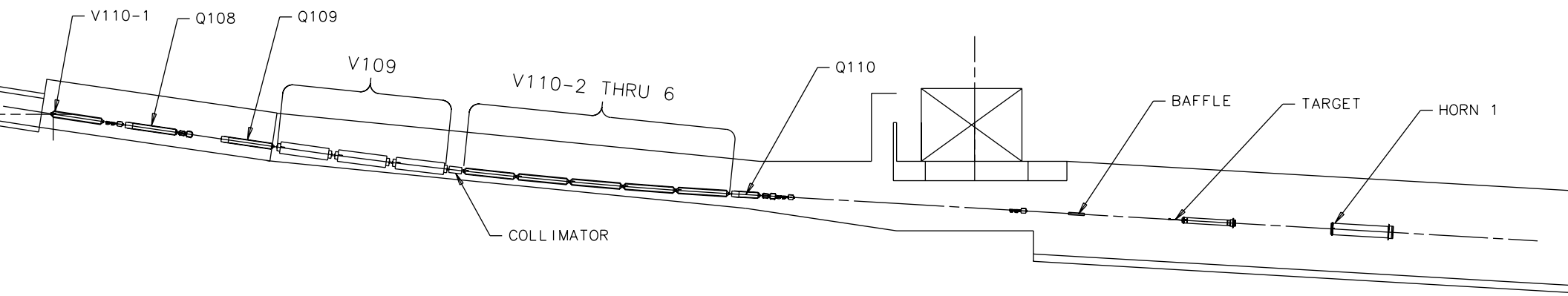

PRETARGET TUNNEL (ELEVATION VIEW)