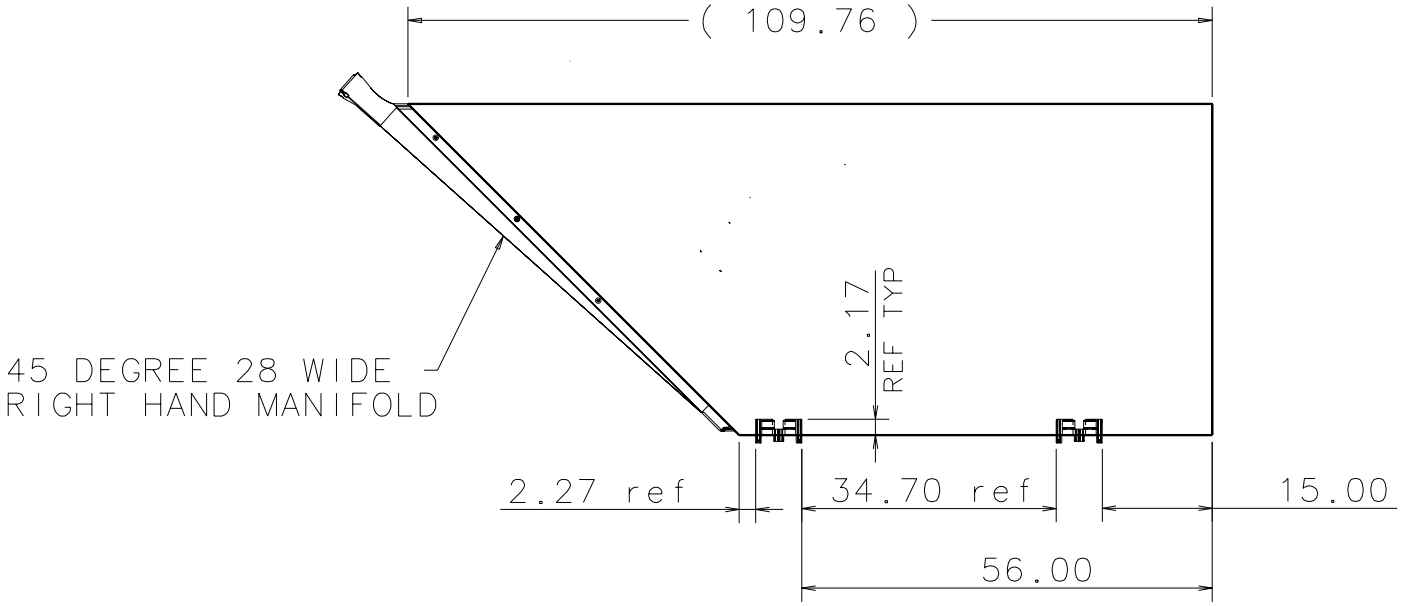MODULE Gv (with 2 clips)