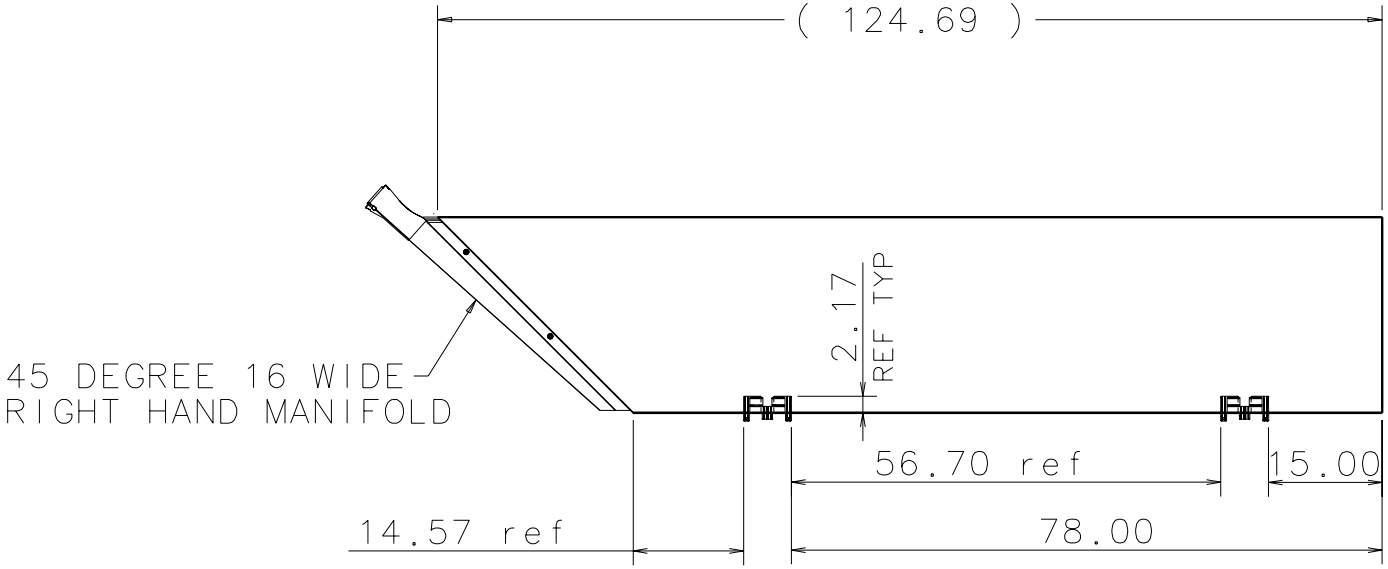MODULE Nu (with 2 clips)