MODULE Mv (with 4 clips)

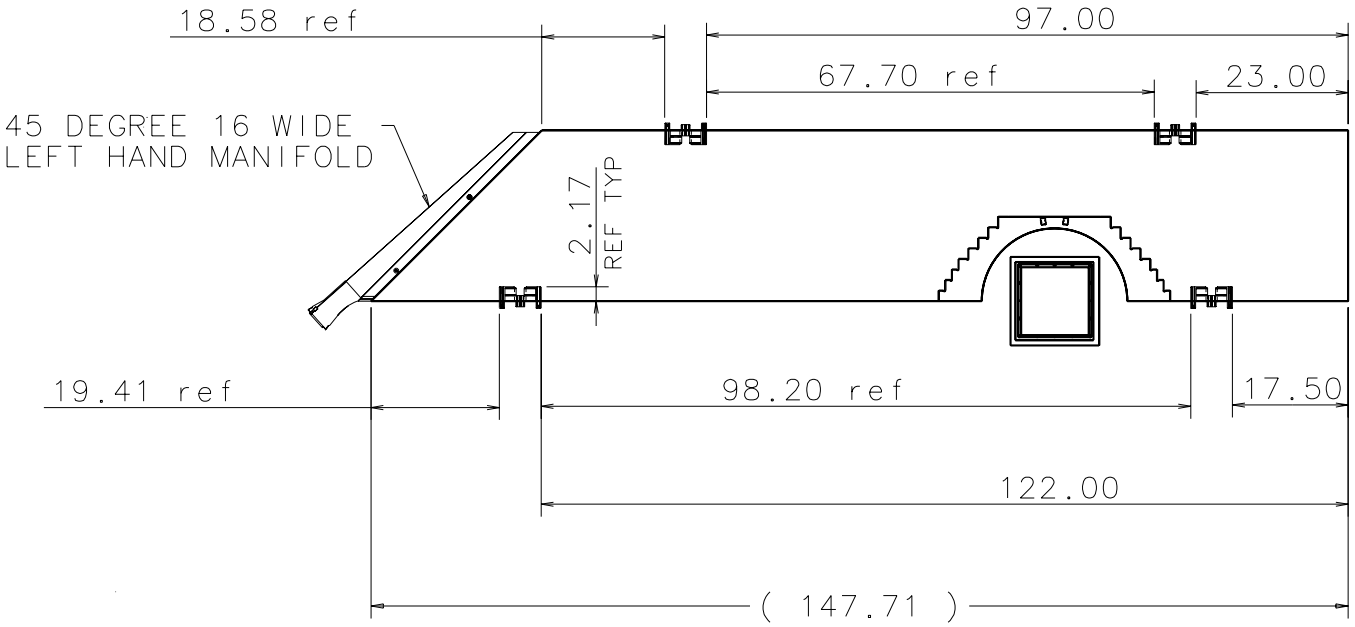

Plotted by edchi on 20-Sep-01 . File: fullyplane_MV1.pff