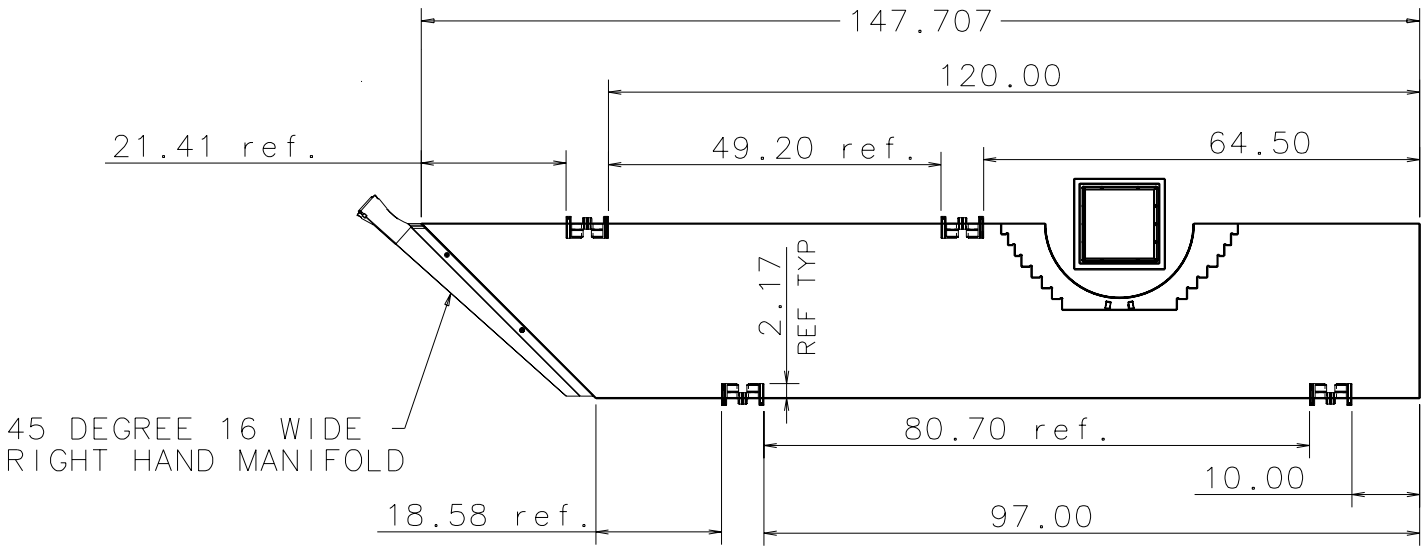MODULE Mu (with 4 clips)