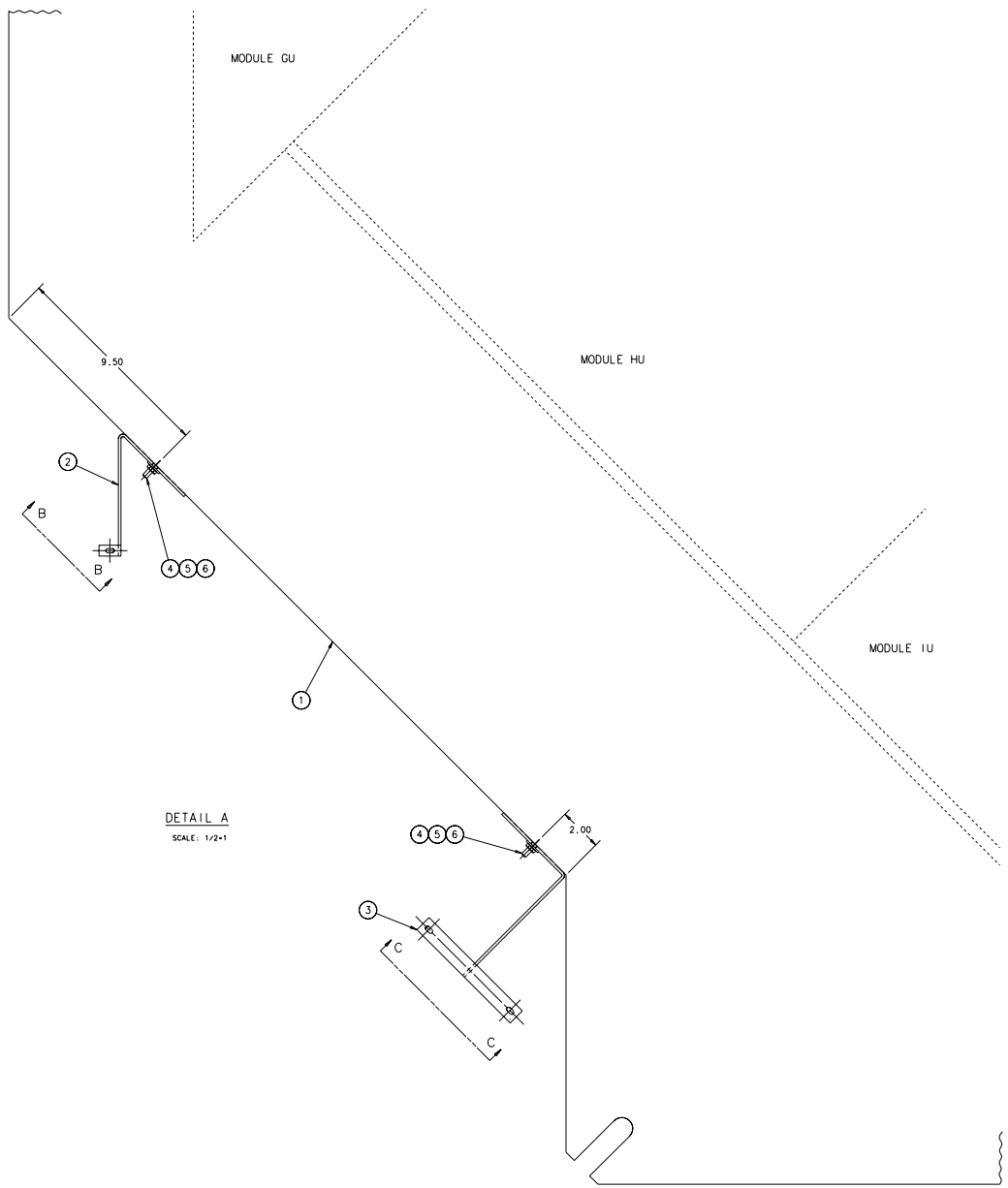

DETAIL A

SCALE: 1/2=1

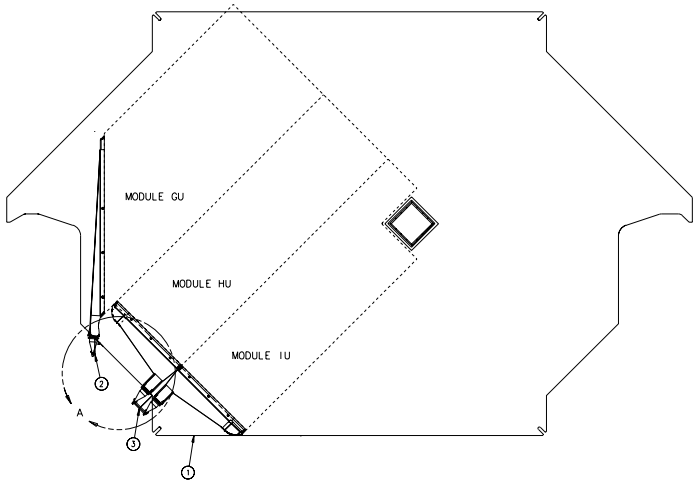

NEAR DETECTOR PARTIALLY INSTRUMENTED PLANE IN U DIRECTION
28 MODULE X 20 MODULE X 20 MODULE

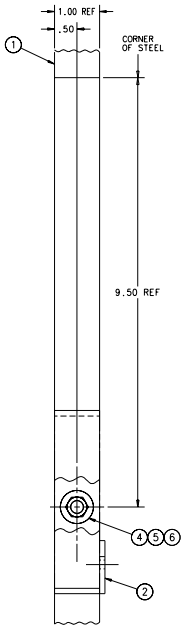

VIEW B-B

SCALE: 1=1

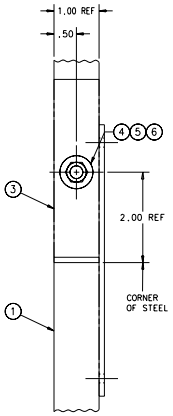

VIEW C-C

SCALE: 1=1

6	COML.	NUT, HEX, 1/4-20 UNC SST	2
5	COML.	WASHER, FLAT, 1/4 SCREW SIZE, SST	2
4	COML.	WELD STUD, 1/4-20 UNC x 3/4" LG., SST	2
3	MC-397740	SCIN. "HUIU" CABLE SUPPORT	1
2	MC-397739	SCIN. "GU" CABLE SUPPORT	1
1		PARTIALLY INSTRUMENTED "U" PLANE	1

UNLESS OTHERWISE SPECIFIED			ORIGINATOR	J.KILMER	22-FEB-2002
.XX	.XXX	ANGLES	DRAWN	P.POLL	05-MAR-2002
± .12	± ---	± 1°	CHECKED	C.NILA	22-MAR-2002
			APPROVED	J.KILMER	22-MAR-2002

1. BREAK ALL SHARP EDGES
2. DO NOT SCALE DRAWING.
3. DIMENSIONS BASED UPON ANSI Y14.5M-1982
4. MAX. ALL MACH. SURFACES 125

USED ON

MATERIAL: SEE PARTS LIST ABOVE

FERMI NATIONAL ACCELERATOR LABORATORY
UNITED STATES DEPARTMENT OF ENERGY

PPD/MECHANICAL DEPARTMENT
MINOS NEAR PLANE
CABLE SUPP.STUD LOCATION, PART U

SCALE	DRAWING NUMBER	SHEET	REV
1/16=1 & NOTED	9213.300-ME-397746	1 OF 1	

CREATED WITH : Ideas8m4 GROUP: PPD/MECHANICAL DEPARTMENT

Plotted by poilpoil on 10-Apr-02 , File: CABLE_SUPP_PARTPLANE_U.prf