DCS: The MINOS Detector Control System

Version 1.0: March 12, 2001

T. Alexopoulos[1], A. Erwin[2], A. Habig[3], P. Huican[2], N. P. Longley[4], M. L. Marshak[5], I. McCoy-Sulentic[4], J. McDonald[6], and C. Velissaris[2]

[1]*Department of Physics, Athens Technical University, Athens, Greece*
[2]*Department of Physics, University of Wisconsin, Madison WI*
[3]*Department of Physics, University of Minnesota, Duluth MN*
[4]*Department of Physics and Astronomy, Macalester College, St. Paul MN*
[5]*School of Physics and Astronomy, University of Minnesota, Minneapolis MN*
[6]*Department of Physics, University of Pittsburgh, Pittsburgh PA*

The MINOS Detector Control System (DCS) is an integrated hardware and software system which controls, monitors, and logs operating parameters for the MINOS Near, Far and Calibration Detectors. This document provides an overview of the DCS incorporating comments and suggestions made at the Third DCS Review and the Rutherford DAQ Workshop, both held during January 2001.

I. DCS OVERVIEW

The MINOS DCS includes six major subsystems: the High Voltage Controller, the Rack Monitor and its incorporated Calibration (Flasher) Communication Interface, the Environmental Monitor, the Beam Monitor, and the Magnet and Coil Controller (Table I). They are overseen with the Intellution "iFix" Supervisory Control and Data Acquisition (SCADA) software package, which also interfaces with the DAQ (Data AcQuisition system) and Oracle Database.

Detector Control installation will begin with a prototype system for the CERN Calibration Detector, upon which final refinements for the Near and Far Detector systems will be based. In these more permanent implementations both local (Detector Hall) and remote (FNAL High Rise) operation will be supported, in both automatic and operator-driven modes.

The MINOS DCS is as a robust, modular system comprised almost entirely of off-the-shelf, industrial control hardware and software. These utilize established communication protocols such as OPC (Object Linking and Embedding for Process Control) and Sockets, which allow distributed processing via ethernet and TCP/IP. These standardized packages also help support reliable operation and rapid debugging, and allow "plug-in" upgrades. Fig. 1 outlines the Far Detector DCS organization, indicating in particular how local and remote access are obtained via processors in the Far Detector Hall, Control Room, and the DCS Satellite in Wilson Hall (Section II A).

II. DCS COMMUNICATIONS AND CONTROL

At the heart of the DCS design is the Intellution SCADA system called iFix. This DCS "Supervisor" runs under Windows 2000 and provides the following functionality:

1. **Data Acquisition and Control Interfaces:** iFix is able to acquire data using up to eight bidirectional I/O drivers, each of which can be linked to multiple related hardware devices. These include built-in drivers for the BiRa (Rack Monitor) and FieldPoint (Magnet and Coil Controller, Environmental Monitor) hardware, and generic OPC servers for other subsystems.

	Vendor	Model	Control	Monitor	Log
DCS Supervisor	Intellution	iFix	X	X	X
High Voltage	LeCroy	1440	X	X	X
Rack Monitor	BiRa	RPS-8884	X	X	X
Calibration	MINOS (Custom)	LED	(X)	—	X
Environmental	Oregon Scientific, National Instruments	WM-918 FieldPoint	—	X	X
Beam Monitor	FNAL	SWIC	—	X	X
Magnet & Coil	National Instruments	FieldPoint	(X)	X	X

TABLE I: DCS subsystems and interaction levels. DCS passes commands to the Calibration Flashers but does not provide logical control. The Magnet and Coil FieldPoint system will be designed and operated by the Steel Group but will log data via DCS.

2. **Warnings and Alarms:** iFix automatically compares monitor data to preset ranges in order to detect out-of-tolerance conditions. Alarms indicate situations which may compromise data quality or indicate a safety hazard, and may be accompanied by automatic hardware- or software-triggered action including AC or HV cutoff. Warnings indicate less serious events which nevertheless require operator interaction. Both Alarms and Warnings trigger DCS display changes and send email to appropriate MINOS personnel.

3. **GUI Interface:** iFix employs a flexible Graphical User Interface (GUI) which will be permanently displayed on dedicated processors in the Near, Far, and Calibration Detector Halls, in the Far Detector (Soudan) Control Room, and in Wilson Hall at Fermilab. These GUI's normally provide a summary of operating conditions arranged by DCS subsystem, using color-coded backgrounds which change from green to yellow or red when Warnings and Alarms are generated. The iFix GUI will also provide access to detailed subsystem data and DCS controls in a page-oriented "browseable" format. Specific operator directions for addressing anomalous DCS signals can easily and naturally be built into this interface.

4. **Internal Database:** iFix maintains its own internal database of detector operating parameters. Relevant statistical analyses can be preprogrammed to produce immediate and valuable on-line diagnostic tools, independent of the historical record maintained by the Oracle Database.

5. **Programmability:** iFix is programmable using Visual Basic for Applications, a customized version of Microsoft Visual Basic. Visual Basic is an object-oriented language that has many of the features of C++ while retaining the syntax of BASIC. It is currently the most popular coding language in the world, for which there is a large knowledge pool available for commercial support. Through it application to DCS programming MINOS students will gain both highly marketable software skills and valuable training in an Object-Oriented (OO) environment.

A. Internal Communications

Because detector control is a real-time critical task, DCS employs dedicated processors to provide modularity and avoid potential problems associated with variable cpu load and memory swapping. In the Far Detector this requires two Windows 2000 processors for the iFix Supervisor and Satellite, and four Linux processors for HV control (Table III). This scheme isolates the first and second supermodule photomultiplier

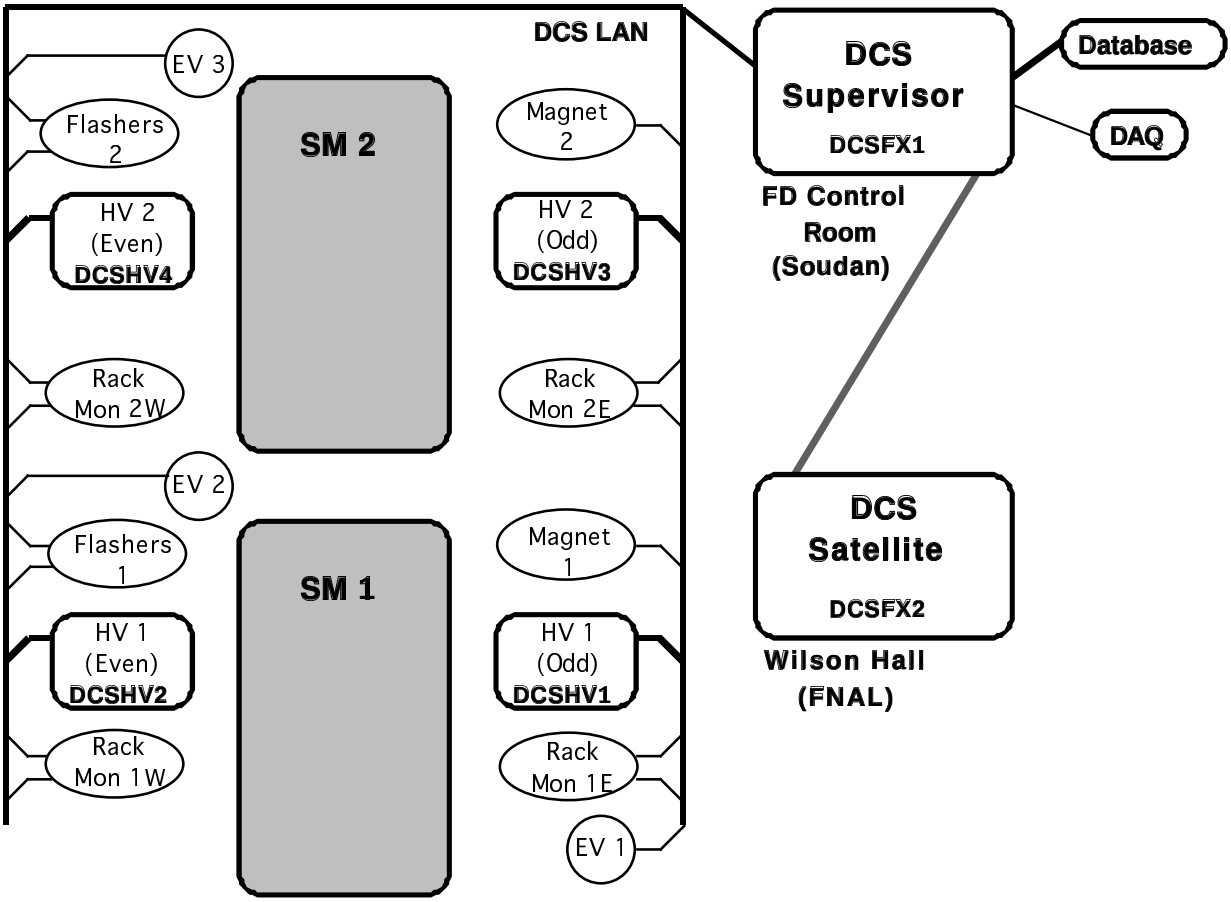

FIG. 1: Far Detector DCS organization. Local iFix access is provided by DCSFX1 in the Soudan Control Room and via VMWare 2.0 on the HV (Linux) processors, DCSHV1–DCSHV4. The iFix Satellite (DCSFX2) allows remote access from Wilson Hall. DCS subsystem drivers (excluding the HV controller) run on DCSFX1, accessing their distributed hardware via the DCS LAN as summarized in Table II. The Near Detector DCS and Calibration Detector Prototype are similar, but with only one High Voltage processor and no iFix Satellite (Table III).

supplies and provides local access to iFix (via VMWare 2.0) on each side of each supermodule. Other DCS subsystems are connected directly to the DCS LAN using Intelligent Instruments EDAS ethernet-to-serial interfaces, either stand-alone (model 1025E) or built into the Rack Monitors (model 1002). Commercial drivers running on the iFix Supervisor processor (DCSFX1) manage the subsystem hardware and provide data links to iFix. These include built-in software for the BiRa (Rack Monitor) and FieldPoint (Magnet and Coil, Environmental Monitor Thermocouples) hardware, and generic OPC servers for the High Voltage and other subsystems (Table II). Calibration data are logged via DAQ-DCS Communications (Section III A).

The Near Detector DCS Supervisor (DCSFX3) will be located in Wilson Hall, with local access provided on its associated HV processor (DCSHV5). There is no Near Detector "satellite" DCS. The same scheme is employed for the Calibration Detector, with the HV processor (DCSHV7) located as near the detector as possible and the Supervisor (DCSFX4) in the appropriate "control room" area. DCSHV6 runs a stand-alone controller for the High Voltage Test Stand in the Soudan 2 Detector Hall (Table III).

DCS for the Near, Far, and Calibration Detectors requires a total of seventeen stand-alone EDAS 1025E ethernet-to-serial devices (one per HV and Environmental station; Table II), and eleven individual processors (four Windows 2000 and seven Linux; Table III). Using preliminary EDAS and PC cost estimates of $500?? and $1,800?? each, respectively, we estimate a total hardware outlay of $30,000?? including $100?? per EDAS for rack mount hardware and cables. The iFix software License cost is $5,000?? for

	Driver	OS	Link	iFix Link	Stations
High Voltage	Custom C++	Linux	RS-232	OPC, Berkeley Sockets	4 FD + 1 TS 2 ND + 1 BM 1 CD
Rack Monitor	BiRa	Win 2000	Ethernet	Built-in	16 FD + 4 DAQ 35 ND + 4 DAQ
Calibration	Custom C++	Linux	RS-485	DAQ-DCS Communications	16 FD + 8 ND
Environmental	Oregon Scientific, FieldPoint	Win 2000 Win 2000	RS-232 Ethernet	OPC, ASCII Files Built-in	3 FD 1 ND + 3 BM 1 CD
Magnet & Coil	FieldPoint	Win 2000	Ethernet	Built-in	2 FD + 1 ND

TABLE II: DCS subsystem links and stations for the Near and Far Detectors (ND/FD), CERN Calibration Detector (CD), Beam Monitor (BM), and Soudan HV Test Stand (TS). The Rack Monitor and Magnet and Coil Fieldpoint hardware provide direct ethernet access while Calibration Communications employ the BiRa RPS-8884's built-in EDAS 1002 (RS-485 & RS-232) interface. The HV and environmental stations require stand-alone EDAS 1025E (RS-232 only) devices.

each of the Near and Far Detector implementations, but will not be necessary for developing the Calibration Detector Prototype. This brings the net Communications and Control budget to $40,000??. Note that the Rack Monitor and Calibration EDAS 1002 ethernet-to-serial devices are integrated into the BiRa RPS-8884 Hardware (Section V).

III. EXTERNAL COMMUNICATION

The MINOS Detector Control System communicates with two external MINOS processes, DAQ and the Oracle Database. This is accomplished via ROOT TSockets. In the case of DAQ-DCS Communications this protocol allows a pre-defined set of detector status messages to be transmitted and interpreted, while in the case of the Oracle Database it provides a direct and platform-independent method for distributing ASCII-formatted DCS data.

A. DAQ-DCS Communications

Because the DAQ and DCS iFix Supervisor employ different operating systems, a platform-independent link must be established between them. Two principle network protocols are available for this task: TCPIP and UDP. TCPIP guarantees data delivery but requires a formal server/client socket relationship. UDP, conversely, guarantees nothing but allows "broadcast" communication unavailable with TCPIP. As reliability is a concern as well as security, we have chosen TCPI for DAQ-DCS Communications. In this protocol a number of client-server connections must be established, but because most are determined in advance a simple socket manager is appropriate (adaptive management is not required).

DAQ-DCS Communications define two type of notification objects: "messages" and "requests." Messages indicate changes of state such as run start and run end, intended for interpretation by a physicist operator. Requests will enable specific autonomous DCS actions to be taken, and will be implemented later as deemed fit to facilitate automatic detector operations. In any case the role of DCS is to provide a service to the DAQ—DCS may send warnings or other information to the, but will not explicitly alter DAQ operations.

A prototype DAQ-DCS communication system has been developed using TSockets as implemented in the ROOT [1] C++ program library. ROOT was chosen because of its flexibility and platform independence,

	OS	Location	Function
DCSFX1	Windows 2000	FD Control Room (Soudan)	Far Detector iFix Supervisor FD Subsystem Drivers
DCSFX2 **DCSFX2**		Wilson Hall (FNAL)	FD iFix Satellite
DCSHV1	Linux	SM 1 E	SM1 Odd-plane HV; iFix Access
DCSHV2		SM 1 W	SM1 Even-plane HV; iFix Access
DCSHV3		SM 2 E	SM2 Odd-plane HV; iFix Access
DCSHV4		SM 2 W	SM2 Even-plane HV; iFix Access
DCSFX3	Windows 2000	Wilson Hall (FNAL)	Near Detector iFiX Supervisor ND Subsystem Drivers
DCSHV5	Linux	ND Hall	ND HV; iFix Access Beam Monitor SWIC HV
DCSHV6	Linux	Soudan 2 Hall	Soudan HV Test Stand
DCSFX4	Windows 2000	CERN Test Beam	Calibration Detector iFix Supervisor CD Subsystem Drivers
DCSHV7	Linux		CD HV; iFix Access

TABLE III: DCS processors. The iFix Supervisor and most Subsystem drivers run under Windows 2000, while the HV controller runs under Linux.

and in order to limit the number of system software dependencies. This protocol incorporates a ROOT object which indicates the type of notification and includes a short string containing the message itself. ROOT GUI classes have been developed to displaying messages and provide further DAQ-DCS functionality.

One important attribute of the system is flexibility in receiving non-ROOT messages (simple strings). This is elegantly handled by ROOT because such messages can be identified either as ROOT objects or as simple string types. Communication acknowledgement is also provided, yielding quick confirmation when messages have been received.

B. The Database

Although iFix will maintain its own historical record of detector operating parameters, it will also transmit an archival abstract to the MINOS Oracle Database. Each hour the Near and Far Detector DCS Supervisors will produce summaries of current operating parameters, with both internal and filename-encoded date-time stamps. Between hourly dumps DCS will write “incremental” files consisting of one-line entries for each parameter change and Warning or Alarm noted by the iFix Supervisor. It will thus be possible to reconstruct any detector state from a combination of one hourly status dump and the following incremental file. Both files will be written in ROOT format via a ROOT TSocket.

IV. THE HIGH VOLTAGE CONTROLLER

The MINOS High Voltage subsystem employs LeCroy 1440 hardware and a custom-designed (C++) controller, communicating via RS-232 (built into the 1440) and EDAS 1025E ethernet-to-serial interfaces. It is modelled after the MACRO [2] system, which was similar in size and scope and operated successfully for approximately ten years. The MINOS implementation requires four LeCroy 1440 HV mainframes per supermodule for the Far Detector, two for the Near Detector, and one each for the Beam Monitor, Soudan

HV Test Stand, and CERN Calibration Detector (thirteen in all). In each Far Detector supermodule the lowest-numbered mainframe provides high voltage to the east side of the odd planes, and the second to the east-side even planes. A third and fourth serve the west side in similar fashion. Odd planes correspond to the "*u*" electronics view, running diagonally from the upper east to the lower west, and even planes to the "*v*" view, running from the upper west to the lower east (Table IV).

Each Far Detector supermodule (SM) includes 242 instrumented planes, 121 in each of the odd (*u*) and even (*v*) views. They are paired sequentially mod 2, or in odd-odd/even-even fashion. This produces 120 plane pairs (sixty odd and sixty even) and two unmatched planes. Each pair requires three multi-cathode (sixteen channel) photomultiplier tubes on each side, multiplexed nine fibers to a pixel. Unmatched planes use only two pmt's each, of which one is only half occupied. The Far Detector thus requires a total of $120 \times 2 \times 3 + 2 \times 2 \times 2 = 728$ independent HV channels.

Each mainframe serves sixty full and one partially occupied mux boxes, or $60 \times 3 + 1 \times 2 = 182$ active channels. The first 180 of these are arranged fifteen each on twelve sixteen-channel cards, yielding five single-sided plane pairs and one spare channel per card. For consistency the unmatched plane is serviced by a thirteenth HV card rather than with an *ad hoc* arrangement of spare channels, the underutilized card being an unavoidable but minor consequence of the fact that the number of planes is not divisible by twenty. The Near Detector, Beam Monitor, Calibration Detector, and Soudan test stand HV systems are similarly organized but smaller in scope.

A. Channel Identification and Control

High voltage channels are numbered consecutively from 0 to 255 in each LeCroy 1440, sixteen per HV card slot. This "physical" or "hardware" channel number is assigned a Logical Channel ID via the local channel map, allowing spare hardware channels to be swapped transparently and providing a more physical representation of the detector for the DCS Supervisor. Logical channel IDs include the Supermodule, Side, first Plane Number, and pmt index, with mux boxes identified via the same scheme. **1E001-1**, for example, is the **1st** of three photomultipliers in mux box **1E001**, which serves the **E** side of plane **001** (and plane 003) in supermodule **1**.

The HV graphical user interface (integrated into the iFix supervisor) will display the logical channel label and physical channel number, identify both planes served by the associated mux box, and indicate whether it presents a "*u*" or "*v*" view. While some of this information is redundant, a complete description may help reduce operator error. Near Detector and Calibration Detector HV nomenclature follow the same scheme in accordance with their respective multiplexing geometries, with "N" or "C," respectively, in place of the supermodule index.

The controller itself consists of approximately 2,000 lines of C++ code, ported from the MACRO (FORTRAN) version and adapted for MINOS in a unix (Linux) environment. Because the E and W ends of the scintillator are both instrumented, and because each mux box contains three separate photomultipliers, it controls voltage in six-channel "groups" which serve both ends (E and W) of a plane pair. Distributed access to the LeCroy Mainframes is achieved via the DCS LAN, using Intelligent Instruments EDAS 1025E ethernet-to-serial interfaces connected to the LeCroy's built-in RS-232 ports.[1] Periodic HV readout includes the full logical channel map, which follows the standard DCS data stream to the Oracle Database.

The entire Far Detector could in principle be overseen by a single HV process, but it was not considered desirable to span supermodules. In addition detector maintenance requires local control of the HV and other DCS systems, for which a processor is needed on each side of each supermodule (four in all for the Far Detector, one for the Near Detector). The iFix Supervisors "farm out" HV control tasks according to Table IV, while the distributed HV processors in turn provide local access to iFix via VMWare 2.0.

[1] RS232-compatible cables are shielded and limited to no greater than 1 m in length.

	Function	Planes	View	Processor	
1	SM 1 E	E-Odd	u	DCSHV1	
2		E-Even	v	DCSHV2	
3	SM 1 W	W-Odd	u	DCSHV1	
4		W-Even	v	DCSHV2	**Far**
5	SM 2 E	E-Odd	u	DCSHV3	**Detector**
6		E-Even	v	DCSHV4	**Hall**
7	SM 2 W	W-Odd	u	DCSHV3	
8		W-Even	v	DCSHV4	
9	Near	E-All	u/v	DCSHV5	**Near**
10	Detector	W-All	u/v		**Detector**
11	Beam Monitor	SWIC 1–3	—		**Hall**
12	Calibration Detector	All	u/v	DCSHV6	**CERN Test Beam**
13	HV Test Stand	—	—	DCSHV7	**Soudan 2 Hall**

TABLE IV: HV Mainframes by function and location.

B. Status

As of this report, the HV controller code is substantially complete. In its present form it can operate a single LeCroy Mainframe using the direct RS-232 port, and can be run either locally (via the keyboard) or over the ethernet (via Berkeley Sockets). Once the EDAS 1025E ethernet/RS-232 interface software library has been incorporated, the subsystem will be ready for installation. This will be accomplished by the DCS group in cooperation with Texas A&M University, which will handle hardware delivery to the Near, Far, and Calibration Detectors. TAMU will also make the minor hardware modifications required for use of the 1440 system with the SWIC beam monitor (Section VIII).

Since the HV subsystem employs existing supplies (obtained from Fermilab Prep) and the HV cables themselves will be produced by the scintillator group, it presents few few DCS-accountable costs. These include only the HV processors and ethernet-to-serial interfaces already described in Section II A on DCS Communication and Control.

V. THE RACK MONITOR

DCS will monitor electronics rack status at all three detector sites. This is accomplished with the BiRa RPS-8884, a 1U rack-mounted module that communicates with the iFix Supervisor via direct ethernet link [3] and built-in software drivers. The 8884 is a generic device customized to meet MINOS needs, addressing the following three general tasks:

1. **Safety:** Provide immediate AC shutdown in the event of excessive heat, smoke, or (in the case of Near Detector Front-End crates) cooling system leak.

2. **Monitor:** Measure and log backplane voltage, temperature, and other operating parameters which might affect electronics performance. When appropriate, indicate Warning or Alarm status to the iFix Supervisor.

3. **Communications:** Provide the primary communication link for the Calibration LED Flashers, and a secondary "hard reboot" signal for the DAQ processors.

A. Warnings and Alarms

In accordance with FNAL safety regulations, unattended AC powered racks must be able to shut themselves off in the event of fire. MINOS DCS extends this capability to include large input power fluctuations, high temperature warnings, significant deviations from expected backplane voltage levels, and leaks in the Near Detector (liquid cooled) Front-End Racks. Data from the relevant hardware systems are periodically logged along with other DCS information, generating Warnings (which do not cut rack power) and Alarms (which do) as follows:

- RPS-8884 "Fenwal CPD7051" ionization smoke detectors, installed near the top of each rack: Alarm and AC cutoff.
- limited AC power surge or voltage out of phase monitors, internal to the AC relay boxes: Alarm and AC cutoff.
- Cooling air temperature sensors, mounted in both input and output flow: Warning at 40°C input temperature, input/output differential of 20°C, or output humidity of 100%. Alarm and AC cutoff at 50°C input temperature or 30°C differential.
- VME crate DC backplane voltage monitors, provided via crimped ring terminal wire connections to the 9U VME crate backplane: Independent Warning and Alarm (AC cutoff) thresholds hard-wired by appropriate resistor selection during RPS-8884 installation.
- FNAL VME cooling fan monitor, provided by a two-terminal global OR MOSFET output: Warning for failure of one or more fans (provides redundancy for air temperature monitors and early detection of single-fan failure).
- Additional Near Detector Front-End (water-cooled) rack functionality:

  BiRa 1U 19" rack-mounted parallel-plane screen mesh conductivity sensor/leak detectors, installed beneath the crates: Alarm and AC cutoff.

  GEMS RFO-2500 series RotorFlow (water flow) sensors, installed in the cooling water line: Warning at 3.5 gallons per minute (gpm), Alarm and AC cutoff at 2.5 gpm.

  LM35 water temperature sensors, mounted inline, inside a copper block secured to the water inlet pipe: Warning at 20°C, Alarm and AC cutoff at 30°C.
- Additional Far Detector Power Distribution Box functionality:

  Differential ±5 DC voltage monitor, provided via crimped ring terminal wire connections: Warning and Alarm thresholds to be determined.

  Temperature monitor, provided via internal AD590M temperature current transducers: Warning and Alarm thresholds to be determined.

The RPS-8884 can provide a redundant VME power supply monitor via a serial (RS-232) link to the Weiner Power Supply. We do not employ the CaenNET interface which normally utilizes this port, but the corresponding port on the built-in EDAS 1002 interface is reserved for this purpose in the event that the communication protocol is available from Weiner. This possibility will be explored as part of the CERN Calibration

Detector Prototype DCS. The LED Flasher boxes, finally, are not directly monitored by the RPS-8884 but communicate via it's built-in EDAS 1002 serial (RS-485) port (Section VI).

AC cutoff is accomplished by a BiRa relay box downstream of the rack monitor input. This provides continued monitor functionality even after a trip, allowing the triggering condition to be determined on-line. In event of total power failure, the RPS-8884 does retain Alarm and Warning status for up to twenty-four hours. Even after systemic failure this provides a recoverable data record. In any case we emphasize that while any condition resulting in AC cutoff will also prompt an iFix Alarm, the trip process itself is hardware-driven and independent of DCS software. The lone exception to this hardware-driven design is the shutdown of HV to the MUX boxes in a troubled front-end rack, which will be handled through the standard HV control interface.

These relay boxes are being built by BiRa around a pair of Crydom solid-state power relays, a D53DP500 for switching the 208V, and a D2450 for the 120V line. Both are rated at 50A, although 20A breakers are included in the box for safety. The 208V line is presented to the rack with a HBL2326 three-wire locking receptacle, the 120V line with a standard three-prong duplex outlet. A power strip will be provided for additional protected sockets to be used by rack equipment. The form factor of this box will be either a 2U 19" rack mounted box, or a 8"x5"x5" floor or wall mounted box. Status lights indicating the presence of voltage before and after the relays will be displayed on the box's front panel. The voltage cutoff will be controlled from the RPS-8884 main chassis using a low-current 12V signal, operated both via software and a manual AC relay control button located on the RPS main chassis front panel.

B. VME Reboot

In the case of unexpected VME processor crash it is possible for the system to enter a "locked" state from which software restart is impossible. In this situation a hardware signal independent of the normal VME communications chain is desired. Because the RPS-8884 rack monitor is already connected to the VME backplane this is easily implemented via the System Reset line, which can be forced low via direct operator intervention or when an appropriate DAQ-DCS Communication is received. In most cases this will prompt a VME reboot.

C. DAQ Reboot

In the case of an unexpected DAQ PC crash it is also possible for the system to enter a "locked" state from which software restart is impossible. In this situation a hardware signal to remotely reset the PCs is desirable. An easy but rather brutal way to accomplish this is to ask the RPS units already monitoring the DAQ PC racks for fire to cycle the AC power. A finer-grained and less harsh method would be to ask the RPS units to assert the hardware reset line on the PCs' motherboards. The details of this task will be investigated at a later date.

D. Hardware and Budget

Monitor hardware varies somewhat depending upon rack type, of which there are five: Far Detector (FD), Near Detector Front-End (FE), Near Detector (ND), DAQ (DAQ), and LeCroy (LeCroy). FD racks contain a 9U VME crate, a Power Distribution Box (PDB), and the Calibration Flasher Box. FE racks contain two water-cooled 6U VME crates, two Alner Boxes, and a FieldPoint monitor. Each FD monitor will also include four "satellite" smoke detectors for its associated Front-End racks, which unlike the their Near Detector (FE) counterparts have no active electronics outside the phototubes, and so do not employ

individual RPS-8884 systems. The ND racks, conversely, do not require satellite smoke detectors since the Near Detector Front-End (FE) racks are already instrumented. In other respects they are similar to FD racks, except that only a fraction contain Flasher Boxes. Table V summarize the FD and ND monitor hardware.

Near Detector Front-End (FE) Rack Monitors are similar to those on other ND racks, except that they require leak detectors and a separate set of temperature monitor hardware because these racks are water cooled (Table VI). DAQ racks mount acquisition computers, storage devices, and networking interfaces which are capable of internal voltage and temperature monitoring, so smoke detection and future remote reset capabilities of the DAQ equipment is all that is needed from the RPS units in these racks. Finally, the racks housing the LeCroy mainframes will be monitored for smoke. A single RPS-8884 will provide smoke detection and AC cutoff capability to adjacent LeCroy racks, utilizing satellite smoke detectors and ganging the AC power. These two simpler racks are listed in (Table VII).

Table VIII summarizes MINOS Rack Monitor hardware requirements. Note that only one FD and one DAQ system will be monitored in the Calibration Detector prototype, which has no ND or FE crates. According to collaboration policy, the hardware used in the Calibration detector will be re-used in the main detector, so it has not been budgeted separately. An additional LeCroy and an additional FD-style rack monitor have been allocated for the needs of the Beam Monitoring group's SWIC control equipment.

E. Status

The Rack Monitor has progressed rapidly from general concept to concrete plan, in which DCS requirements have been established and matched to appropriate hardware systems. Particular Warning and Alarm thresholds, the location and shape of the AC cutoff relay boxes, the possible use of CaenNet hardware for redundant VME power supply monitoring, and the issue of how best to remotely reset the DAQ PCs remain to be resolved, but the overall subsystem design is otherwise complete.

Hardware tests and software development will begin soon on the first RPS-8884 prototype at the University of Minnesota, Duluth. To assist with this task additional resources have been procured to support Eric Hall, an undergraduate Physics Major working with Alec Habig on RPS-8884 hardware testing and software development, and at least one other undergraduate researcher over the summer. This effort includes in particular the Rack Monitor/iFix data link and Calibration Flasher Communications Interface (below), efforts which will culminate with the installation of a prototype DCS at the CERN Calibration Detector in August 2001.

VI. THE CALIBRATION COMMUNICATIONS INTERFACE

In addition to its own intrinsic monitoring functionality, the BiRa RPS-8884 Rack Monitor includes a built-in Intelligent Instruments EDAS 1002 ethernet-to-serial interface. This provides both RS-232 and RS-485 ports which can be addressed virtually over the ethernet in the same manner as local ("'physical") serial interfaces. While the RS-232 port is reserved for a possible supplementary VME power supply monitor (Section V A, the RS-485 port provides a local communications link to the Calibration Flasher Boxes. This allows distributed LED Flasher control using commercial software which makes the ethernet link essentially transparent. While this link is provided by DCS hardware, however, it does not provide for direct data transfer to the iFix supervisor, nor do Flasher transmissions take place in a manner conducive to DCS monitoring. LED Flasher status will therefore be transmitted to DCS via ROOT TSockets as DAQ-DCS communications.

Item	Cost	#	Total
RPS-8884	$1,950	1	$1,950
120/208V AC Relay Box	830	1	830
AC Relay Coil/Power Cable	60	1	60
120V AC power strip	20	1	20
VME DC cable	25	1	25
Inlet Air Temp Board	135	1	135
Inlet Air Temp Cable	35	1	35
Outlet Air Temp/Humidity Board	160	1	160
Outlet Air Temp/Humidity Cable	35	1	35
Smoke Detector	150	1	150
Smoke Detector Cable	20	1	20
Satellite Smoke Detector (FD)	150	4	600
Satellite Cable (FD)	20	4	80
		Total (ND)	$3,420
		Total (FD)	$4,100

TABLE V: Standard Near (ND) and Far Detector (FD) Rack Monitor hardware.

Item	Cost	#	Total
RPS-8884	$1,950	1	$1,950
120/208V AC Relay Box	830	1	830
120V AC power strip	20	1	20
AC Relay Coil/Power Cable	60	1	60
VME DC Cable	25	2	50
Water Flow Sensor	120	1	120
Water Temp Sensor Block	25	1	25
Water Temp Sensor	5	1	10
1U Mesh Leak Detector	170	2	340
Smoke Detector	150	1	150
Smoke Detector Cable	20	1	20
		Total (FE)	$3,570

TABLE VI: Near Detector Front-End (FE) Rack Monitor hardware.

Item	Cost	#	Total
RPS-8884	$1,950	1	$1,950
120/208V AC Relay Box	830	1	830
AC Relay Coil/Power Cable	60	1	60
Smoke Detector	150	1	150
Smoke Detector Cable	20	1	200
Satellite Smoke Detector (LeCroy)	150	1	150
Satellite Cable (LeCroy)	20	1	20
120V AC power strip (DAQ)	20	1	20
		Total (DAQ)	$3,030
		Total (LeCroy)	$3,180

TABLE VII: DAQ and LeCroy Rack Monitor hardware. A LeCroy rack monitor serves adjacent racks.

VII. ENVIRONMENTAL MONITORING

MINOS Environmental Monitors provide archival measurements of air and detector temperature, pressure, humidity, airflow speed and direction, and radon activity. These are provided in three locations at the

System Type	Detector Near	Far	Cal	Test Stands	Number Instrumented	Unit Price	Total Cost
FD	1	16	6	2	17	$4,100	$69,700
ND	8	0	0	2	8	$3,420	$27,360
FE	27	0	0	2	27	$3,570	$96,390
DAQ	8	8	1	1	16	$3,030	$48,480
LeCroy	2	4	1	1	6	$3,180	$19,090
						Subtotal	$241,930
						10% volume discount	-$24,193
						Total	$217,737

TABLE VIII: Rack Monitor hardware summary. Calibration Detector and Test Stand racks are listed for informational purposes, but not budgeted seperately. An additional FD-style and an additional LeCroy rack monitor have been allocated for the Beam Monitor Group's SWIC control racks at the near detector.

Far Detector and one location at each of the Near and Calibration Detectors, and (except for Radon Activity) at each of the three Beam Monitor SWIC devices in the muon alcoves.

Standard atmospheric measurements are obtained by the Oregon Scientific WM-918 Electronic Weather Station, an integrated meteorological device with a built-in RS-232 interface. It is read out by a driver running on the DCS Supervisor processor via the the DCS LAN using a stand-alone EDAS 1025E ethernet-to-serial interface. Data are written to disk in ASCII format for importation by iFix.

Radon measurements are particularly important in underground work areas, where the level of this naturally occurring radioactive gas can be elevated because of its high density and the proximity of its source, heavy unstable isotopes in the soil. DCS will continuously monitor radon activity at all Environmental Monitor sites using Aware RM-80 Radon Monitors read out via a National Instruments FieldPoint FP-CTR-502 counter module. FieldPoint stations attached to each Environmental Monitor also allow direct detector temperature measurements using the FP-TC-120 thermocouple module, and provide simple DC voltage measurements for the beam monitor electronics at much less expense than full-fledged RPS-8884 systems.

A. Budget and Status

Each WM-918 Weather Station is estimated to cost $300??. FieldPoint hardware is $1,500?? per site, including the ethernet interface and power supply, radon monitor counter module, and thermocouple module, while the Aware RM-80 itself is $1,000??. Thus the five Near Detector, Far Detector, and Calibration Detector Environmental Monitors require a total estimated outlay of $14,000??. The three Beam Monitor sites exclude the radon monitor but replace its associated FP-CTR-502 with a multichannel analog-to-digital converter, but include only one WM-918. The estimated total for these three systems is $4,800??, for a net estimated Environmental Systems allocation of $18,800??. Ethernet port and included in the cost of the DCS LAN, while stand-alone EDAS 1025E ethernet-to-serial interfaces were described in Section III

The entire Environmental Hardware system consists of off-the-shelf commercial systems. The Oregon Scientific WM-918 (Windows 2000) driver has already been exercised, as has the built-in Field Point/iFix link. Operation of the Aware RM-80 with FieldPoint has yet to be demonstrated, however, and (as will all DCS subsystems) complete integration with the iFix supervisor is expected to require a significant investment before the prototype Environmental Monitor is ready for installation at the CERN Calibration Detector in August 2001.

VIII. THE BEAM MONITOR

At present Beam Monitoring is considered only for the muon beam at the downstream end of the MINOS decay pipe, just south of the Near Detector hall. Its modular Segmented Wire Ion Chambers (SWIC) system could, however, be extended with little change to accommodate a future hadron monitoring system.

A. SWIC Hardware

Fig. 2 shows the physical layout of the muon monitoring system and associated electronics, including 96-channel SWIC devices located in three muon alcoves downstream of the beam absorber. SWIC readout electronics are a FNAL standard, utilizing the SWIC's built-in Internal Sequencer and Dual Port Memory and controlled by an accelerator division VAX. Communications are achieved via ethernet and a single centrally located VME crate (Fig. 3). High Voltage is supplied by LeCroy hardware as described in Section IV, with modifications according to Application Note AN-48 to accommodate the 0–500 V range of the chambers.[2]

The Beam Monitor requires six ethernet LAN ports: three at the Master Readout rack for the VME processor, WM-918 Environmental Station, and EDAS 1025E interface connected to the LeCroy HV supply, and three for the FieldPoint temperature and backplane voltage monitors. The SWIC system also requires an accelerator clock signal, obtained from the Near Detector Hall via a 900 foot RG-8 cable.

B. SWIC Readout

SWIC readout will include pedestal, beam spills, and between-spill calibration data. This is accomplished with the same model used for Beam Monitor test runs, in which a Visual Basic program (in this case running on the DCS Supervisor) will open a socket to request data from the accelerator division VAX, which in turn obtains it from the SWIC VME crate. These data can be used to characterize the muon distribution in multipolar form, perhaps up to the fifth moment.

SWIC data including end-of-spill information will be written to disk in ASCII format and imported into iFix (Table IX). After some experience has been gained with beam behavior, iFix will set Warnings and/or Alarms based on variations in the moments. While this process will be largely automatic, periodic "manual" voltage plateau curves will be run to verify SWIC performance and test chamber gas purity.

IX. THE MAGNET AND COIL CONTROLLER

While the Steel Group is responsible for Magnet and Coil control, it will log data to DCS. Both functions are accomplished via National Instruments FieldPoint hardware interfaced to the coil power supply's internal remote readout and control system. Currents are measured with built-in power transducers and coil temperature using standard FieldPoint modules. Resistance bridges are also included to monitor small changes in coil resistance, and interlocks are used to shut down the current in the event of local mechanical or electrical failure. Similarly to the RPS-8884 Rack Monitor AC relays, the Coil Monitor produces software FieldPoint system is hard-wired to the power supply interlocks while the Magnet and Coil Controller (a LabView process) and the iFix Supervisor employ built-in drivers for remote (ethernet) access.

Induction data will be written in ASCII format and proceed via files on network-mounted disks. The only substantial source of communication between the DCS and magnetics PCs is change of condition

[2] While the AN-48 procedure is straightforward, it describes a silicon microstrip application and satisfactory performance for the SWIC devices must still be demonstrated.

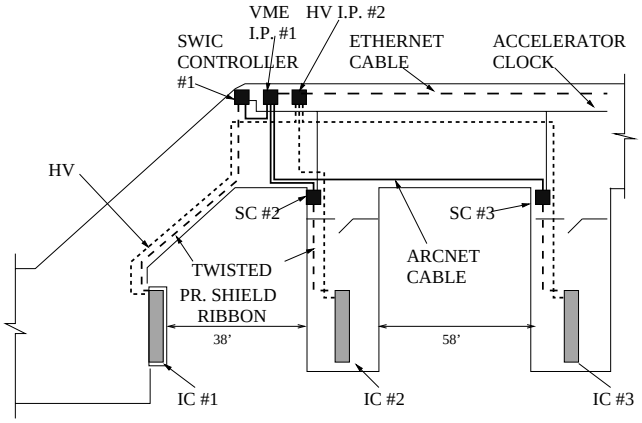

FIG. 2: Schematic layout of the beam absorber area and muon alcoves. Cable runs are indicated for the three SWIC controllers.

Item	**Words**
Last 2 Beam Position Monitors (BPM's; $x+y$)	$2+2$
OTR (Optical Transition Radiation) monitors	2×400
Muon beam monitor chambers	3×96
Low energy beam Budal monitor	1
If higher energy beam targets	$(+1)$
Left/Right thermocouple monitors (for beam wander; need a few minutes for equilibrium)	$1+1$
Horn currents, timing, microphone	$4+4+4$
Hall probe and B-field pickup	2
Target pile temp	1
Hadronic Hose currents, timing	$4+4$
Absorber temps (8 Al & 1 steel water cooled; 3–5 steel, not water cooled.	$8+1+m$
Water flow meter, temp, level	3
Cooling air temp in, out	$1+1$
Decay pipe vacuum, temp	$1+1$
Exhaust stack monitor for air activation	1
Beam loss monitors	$+n$
Word Count	$1135+m+n$

TABLE IX: Beam Monitor data (preliminary).

commands and status feedback (e.g. degauss SM1, ramp down, ramp to standard operating conditions, set current in SM N to i). The details of this interface have yet to be addressed, but it is similar to the light injection and HV subsystems in its software and hardware requirements. DCS monitor channels are (preliminarily) summarized in Table X.

Synchronization of the field monitoring system, the current settings, and the current measurements is an important component of the magnetic calibration process. This problem is solved by having all signals and controls run though the magnetics (coil and induction) PCs. Readout is separated by side and supermodule

Signal ID	Type	Activation	
Current Setting	Analog	0–10 VDC	
Forward/Reverse	Contact	SPDT	**Magnet**
DC On	Contact	NO	**Power**
DC Off	Contact	NC	**Controls**
Remote Reset	Contact	NO	
Contact Spares (3)	Contact		
Output V	Analog	0–10 VDC	
Output I	Analog	0–10 VDC	
Analog Spares (2)	Analog	0–10 VDC	**Magnet**
Forward	Contact		**Power**
Reverse	Contact		**Monitors**
Interlock Ready	Contact		
DC On	Contact		
Contact Spares (3)	Contact		
T/C Temp #1–10	Analog	TBD	**Coil**
Klixon over Temp Sum	Contact	NC	**Temp**
T/C over Temp Sum	Contact	NC	**Monitors**

TABLE X: Magnet & Coil signals (preliminary). NO/NC = normally open/closed.

in the Far Detector, with Fieldpoint stations located on the lower-deck south-west end of SM1 and the lower-deck north-west end of SM2. Noting that the question of dedicated DCS and magnet PC use is to be addressed within this Review, readout PCs are planned on the mid-level decks, three on the east and one on the west, all connected to the DCS LAN.

While this (preliminary) section describes the Far Detector, most coil and magnet systems information applies to the Near Detector as well. Little progress has, however, been made in detailed design of this system. We hope to address it during Spring 2000 on the Near and Far Detector coil prototypes, which we expect to be operational by the end of Winter.

X. DCS CABLES

The MINOS DCS system will employ a limited number of cables. These include both RS-232 and RS-485 compatible cables, both shielded and limited to 1 m in length in order to reduce the possibility of interference. In addition the Rack Monitor will require a limited number of and all DCS cables will be commercially manufactured in accordance with MINOS and FNAL guidelines.

XI. THE CERN CALIBRATION DETECTOR DCS PROTOTYPE

The first DCS hardware will be delivered to the CERN Calibration Detector in in April-May 2001. It consists of a “stand-alone” HV controller installed by Macalester and the University of Minnesota-Twin Cities. During summer 2001 Wisconsin will develop the file-sharing protocol for iFix and the Oregon Scientific Environmental Stations, while Minnesota-Duluth will complete a Rack Monitor Prototype and develop the built-in iFix/BiRa interface. All four groups will assist in development of the iFix Graphical User Interface in order to produce a working DCS prototype for installation at CERN during August 2001.

XII. SUMMARY AND BUDGET

Up to this point DCS efforts have been largely devoted to subsystem hardware and planning the global DCS structure. This document represents our attempt to address remaining considerations from the January 2001 DCS Review and Online Workshop, and to formalize the global DCS design. It is expected that this effort will continue through the March 2001 MINOS meeting at Fermilab, after which additional comments will be incorporated into Version 2.0 of this document.

While most of the DCS subsystems have reached or are near operational levels, seamless iFix administration of the HV and other DCS processes will require significant additional effort. These issues of global integration and communications are therefore expected to occupy much of our effort throughout the period between installation of the Calibration Detector HV Controller and construction of the first Far Detector planes. Outstanding issues include:

- **Graphical User Interface** iFix provides powerful GUI capability, and the overall structure of the iFix Detector Control System has been established. Individual pages will be developed for the CERN Calibration Detector, and modified for use in the Near and Far Detectors according to experience gained there.

- **High Voltage** The HV controller has demonstrated socket-based operation and iFix provides built-in socket access. These two capabilities will be integrated into the DCS prototype for use at CERN, and then expanded for multi-process HV control in the Far Detector.

- **Rack Monitor** The iFix Supervisor has built-in capabilities for operating the BiRa 8884 Rack Monitors. The will also be developed as part of the DCS Prototype, and expanded for the larger Far Detector System. The water-cooled Near Detector Front-End Racks will require additional hardware and software capabilities, but these are provided in a modular format by the vendors and their implementation is expected to be straightforward.

- **Calibration** The particular calibration information to be logged by DCS must be identified. I will be delivered to DCS using the same ROOT Tsocket protocol as other DAQ-DCS data exchange.

- **Environmental, Beam Monitor, Magnet & Coil** These subsystems will shared data with iFix using ASCII files. The iFix supervisor's built-in data import capability will be customized to accommodate the various formats, but this task is straightforward.

- **Database** Significant advances in our understanding of the DCS contributions to the data stream were made at the Rutherford DAQ workshop, but considerable efforts remains in finalizing the details of the data stream. Lessons from the CERN prototype will again be applied to later full-scale DCS implementation.

Aside from their effect on the Communication and Control budget of $40,000, the High Voltage Controller, Calibration Monitor, Beam Monitor, and Magnet & Coil hardware do not contribute to DCS-accounted hardware costs. The Environmental Monitor System requires $18,800, while the Rack Monitors outlay of $170,870 makes up the majority of the total estimated $230,670 DCS hardware budget.

REFERENCES

[1] R. Brun and F. Rademakers, *Nucl. Inst. Meth. A* **389**, 81 (1997). See also http://root.cern.ch/.
[2] M. Ambrosio *et al., Phys. Rev. D* **56**, 1407 (1997); **56**, 1418 (1997).
[3] `http://www.bira.com/cat/rps.htm`.

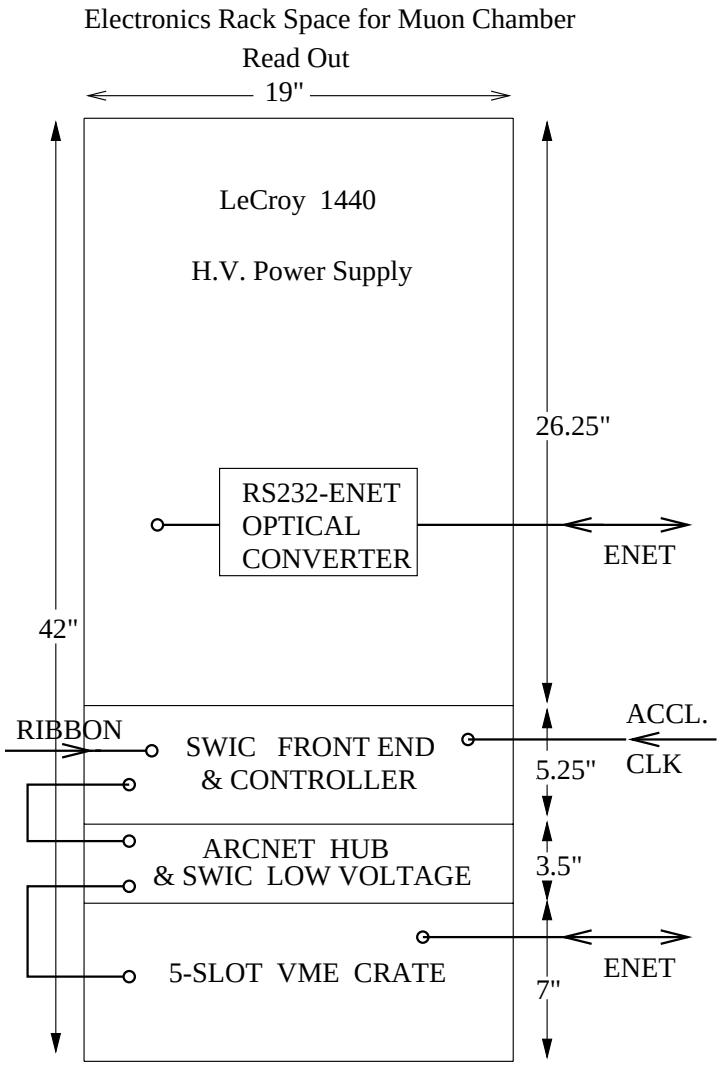

FIG. 3: The Beam Monitor SWIC master readout rack. It contains the LeCroy 1440 high voltage supply, SWIC controller and front-end electronics, SWIC low voltage supply and ARCNET hub, and VME readout crate. The second and third racks contain only the SWIC controller and front-end electronics, and the SWIC low voltage supply.