Mode of Operation of the MINOS Far Detector Timing System

Version 1.2

(By A. Weber and C. Perry, University of Oxford)

07 November 2000

Introduction

The MINOS far detector timing system consists of several components:

- Timing Personal Computer (TPC)
- Timing Central Unit (TCU)
- Timing Receiver Card (TRC)
- GPS clock

This document tries to summarise the mode of operation and it's interplay with the other MINOS systems. For a full description of the timing system see http://helunx.rl.ac.uk/minos/daq.

Timing Personal Computer

The TPC is the main interface between the timing system and the rest of MINOS. It will communicate with the run control (RUNCO) via TCP/IP sockets. This communication will be bi-directional. It will interpret these commands and send the proper set of instruction to the TCU. Furthermore it will provide status information for monitoring purposes. Communication:

- RUNCO -> TPC
    - Prepare for run
    - Start run
    - Stop run
    - TRC status (see below)
- TPC -> RUNCO
    - Acknowledge
    - Command finished (important for charge injection runs)
    - Status of TCU
    - Status of GPS clock

Initialisation files are stored in the database. RUNCO retrieves this files from the DB and makes them available to the TPC. Further initialisation parameter can be passed in the "prepare for run" command.

The TCP will also be interfaced to the GPS clock and act as the principle network timeserver for the far detector. All ROP will synchronise their internal clock to the TPC using the SNTP protocol. Other DAQ computers will use (S)NTP to get the proper network time. Non-DAQ computers will be served by another server peered to the TPC. The NTP server will normally be locked to the GPS clock.
In case the GPS signal goes away it has to lock on the 1pps signal from the TCU (see below).

Timing Central Unit

The timing central unit uses passive splitters to optically distribute a 1 second signal (1pps), a 10MHz clock, an execute signal, and the buffer swap time to the TRC. It is controlled by the TPC via a serial interface. Monitoring and status information will be send to the TPC (receiving GPS signal, PS, ???).
Functions provided by the TCU:

- Switch on/off VME interrupt generation
- Start/stop individual timing signals (???)
- Change buffer swap interval length
- Generate trains of executes signals with predefined spacing and phase relative to the 40 MHz signal.

During normal operation the TCU signals are locked to the GPS clock. In case the GPS looses its signal it will be told by the TPC to continue running on its high precision internal oscillator. When the GPS

signal comes back, the run has to be stopped and restarted to re-synchronising GPS, NTP server and TCU.

Timing Receiver Card

This is a 9U VME card, which serves several purposes. It derives the following signals from the optical signal provided by the TCU. They are transmitted as LVDS signals to a custom J3 back plane (J1 connector):

- 1pps
  An LVDS signal appearing once a second on pin C27/C28
- 40 MHz clock
  An LVDS signal appearing at C29/C30
- Execute signal
  An LVDS signal appearing at C25/C26
- Buffer change signals
  An LVDS signal appearing at C23/C24. The state of this signal defines which buffer the VARC should write to.
- Buffer change interrupts
  Simultaneous to the buffer change signal a VME interrupt is issued on the VME back plane (IRQx selectable by jumpers). This interrupt is used by the read out processor (ROP) to trigger a buffer readout from the VARC. The status vector (D8) will specify the buffer to be read out.

The TRC will transmit status information (1 bytes every second) to the ROP via a serial line (maybe changed to VME bus later). This status information will form part of the ROP status word, which will be transmitted via the data stream to the branch readout controller (BRP). The BRP will copy this data to RUNCO. RUNCO will than take care to transfer the necessary information to DCS and TPC. Any relevant information will be written into the database by DCS.

GPS clock

It will issue a 1-second-signal and a 10 MHz clock to which the TCU will be locked. It will also transmit time and status information to the TPC via a serial interface.

Figure

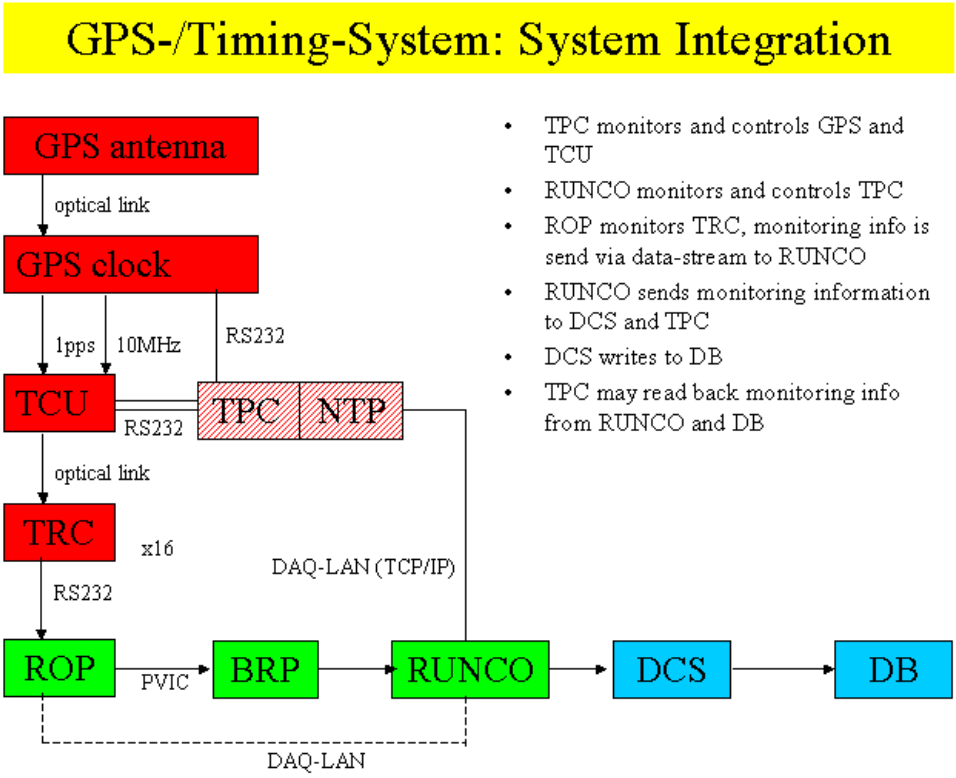

Open Questions

- Do we need a specialised TPC or is there a general PC to be used? (Light injection PC?)
- What is the functionality the timing system has to provide? (Number of executes, relative timing, frequency, …) (John, Geoff, …)
- What kind of monitoring is necessary?

Acronyms

- **1pps:** 1 pulse per second signal
- **BRP:** branch readout controller
- **DAQ:** data acquisition
- **DB:** data base
- **DCS:** detector control system
- **GPS:** global positioning system
- **LVDS:** low voltage differential signal
- **ROP:** read out processor
- **(S)NTP:** (simple) network time protocol
- **TCU:** timing central unit
- **TPC:** timing personal computer
- **TRC:** timing receiver card
- **VARC:** VA readout card